Enriching Lives

ILLUSTRATED SPARE PART LIST
FOR

2R1040 ENGINE
FOR POWER GENERATION
A/C – EXPORT

APPLICATION CODE NO.
2H.4082

KIRLOSKAR OIL ENGINES LIMITED
Regd. Office: Laxmanrao Kirloskar Road, Khadki, Pune - 411 003, (India).
Tel.: +91 (20) 2581 0341, 2581 5341. Fax: +91 (20) 2581 3208, 2581 0209.
Website: www.koel.co.in

MAY – 2015 PUBLICATION NO. 2H.101.81.0.00 - REV. 04

GROUP INDEX
APPLICATION CODE 2H.4082

SR.NO.	DESCRIPTION	GROUP NO.	QTY.	PAGE NO.
1	AIR CLEANER ASSEMBLY WITH STRAP + RAIN CAP (MAHALE MODEL KFA-01-1-7484)	3H.415.6	1	5
2	AIR CLEANER MOUNTING FOR 3H.415.10.0.00 (2R-ENGINE)	2H.315.1	1	6
3	ALTERNATOR MOUNTING AND BELT GUARD (TURBO)WITH POLY V BELT PULLEY 6PK (2R TO 4RTA)	4H.1484.7	1	7, 8
4	ANTIVIBRATION MOUNTING (PGS-1C POLYBOND MAKE) FOR 2R/3R1040	2H.332.1	1	9
5	BASE PLATE ASSEMBLY FOR 2R1040 SILENT GENSET	2H.896.1	1	10 TO 13
6	BATTERY CABLE 35 SQ. RED & BLACK WITH SUITABLE LUG APP. LENGTH 1M (ONE SIDE BATTERY LUG & OTHER SIDE ROUND LUG)	3H.207.1	1	14
7	BREATHER PIPE FOR CANOPY GENSET	2H.164.1	1	15
8	BREATHER PIPE FOR CANOPY GENSET	2H.164.3	1	16
9	CAMSHAFT	2H.003	1	17
10	CANOPY FOR 20 KVA SILENT GENSET (NEW COMBODIA SINGLE PHASE)	2H.221	1	18
11	CHARGING ALTERNATOR 12V,	3H.315.2	1	19
12	COMBINED LEAK OFF PIPE (M12 UNION)	2H.088.1	1	20
13	CRANK PULLEY FOR POLY V BELT 6PK (2R TO 4RTA)	4H.1295.5	1	21
14	CRANKSHAFT	2H.966	1	22
15	CYLINDER HEAD	2H.983	1	23, 24
16	CYLINDER LINER.(105 DIA)	2H.008	2	25
17	DELIVERY BODY.	2H.013	1	26
18	DIP-STICK	03.036	1	27
19	ENGINE MOUNTING FOOT (FOR PACKING PURPOSE)	2H.124	1	28
20	ENGINE MTG.FOOT (G.E SIDE)	4H.228	1	29
21	EXHAUST PIPING FOR 23 KVA (SAUDI)	2H.162.4	1	30
22	EXHAUST ADAPTOR FOR 2R1040 UPWARD OPENING	2H.115	1	31
23	EXHAUST MANIFOLD (CENTRAL OPENING)	P1.036	1	32
24	FLYWHEEL ASSEMBLY-PG	03.050.1	1	33
25	FLYWHEEL HOUSING	3H.085	1	34
26	FUEL INJECTION PIPE (H.P PIPE 700MM)	P1.011	1	35, 36
27	FUEL INJECTION PUMP (PG STAGE II)	3H.032.2	1	37
28	FUEL PUMP 2R1040 4% GOV. P.G. (MICO NO. 9 440 030 029) F002 AOZ 390.	2H.048	1	38 TO 49
29	FUEL PUMP GEAR.	2H.011	1	50
30	GEAR CASING (MACHINING)	3H.962	1	51 TO 53

SR.NO.	DESCRIPTION	GROUP NO.	QTY.	PAGE NO.
31	HOSES FOR 3H.415.10.0.00 AIR CLEANER ASSEMBLY(RB22/RB33)	47.415.4	1	54
32	INJECTOR FOR CPCB (5X0.19 P TYPE)	3H.148	2	55
33	INLET MANIFOLD (FWE OPEN)	2H.056	1	56
34	INTERMEDIATE GEAR AND SUPPORT FOR COMBINED GEAR CASING	4H.237.1	1	57
35	KIT GROUP FOR CC GENSET. (FASTNERS.) FOR P1 SERIES ALT.	02.511.6	1	58
36	KIT ITEMS OF SPARES (WITH SPIN ON FUEL FILTER & POLY V BELT)	3H.350.3	1	59
37	L.O.HEADER (W/O OIL COOLER)	2H.964.1	1	60
38	LIFTING HOOK (TURBO ENGINE)	4H.170	1	61
39	LOOSE ITEMS TO BE SUPPLIED WITH 2R ENGINE	3H.216.6	1	62
40	LUB OIL DRAIN ARRANGEMENT	3H.345.17	1	63, 64
41	LUB OIL PUMP	3H.005.2	1	65 TO 67
42	LUB OIL SUMP (SHEET METAL FOR 2R1040 GENSET)	2H.072	1	68
43	MICO STARTER 12VDC 2.7KW SUITABLE FOR - 20 deg. C	2H.301	1	69
44	MONOBLOCK CRANKCASE	2H.001.1	1	70 TO 73
45	NAME PLATE	38.065	1	74
46	NAME PLATE FOR KG GENSET	3H.227	1	75
47	OIL SEAL HOUSING (PG S/F SHEET METAL SUMP)	2H.039	1	76
48	PISTON AND CON ROD (HM)	3H.106	2	77, 78
49	POLY V BELT (FENNER, 6PK-1190)	4H.1493	1	79
50	POWER HARNESS FROM ALTERNATOR TO CONTROL PANEL, 16 SQMM (NEUTRAL 16 SQMM), 3 PHASE, WITH POLYAMIDE CONDUIT OF GLAND SIZE FNC PG 29. CABLE LENGTH 1100MM, CONDUIT LENGTH 600MM	2H.918.1	1	80
51	PUSHROD & TAPPETS	2H.007	2	81
52	RADIATOR FAN (430 DIA , PUSHER)	4H.083.2	1	82
53	RADIATOR FAN MTG. WITH 30 MM SPACER (STAGE 1,PG)	4H.083.6	1	83
54	RADIATOR FOR CANOPIED GENSET	2H.139.10	1	84
55	RADIATOR MTG. ACCESSORIES FOR OPEN GENSET 2R1040, (EXPORT & P.U. PAINTED)	3H.216.7	1	85
56	RADIATOR WATER DRAIN CONNECTION FOR SHANTI PROJECT (1.4"NPTF)	3H.153	1	86
57	RESIDENTIAL SILENCER	2H.161	1	87
58	ROCKER COVER (ALUMINIUM)	2H.107	1	88, 89
59	SET OF STICKERS FOR CANOPY SET (UP TO 50 KVA)	38.065.2	1	90, 91
60	SPEED ADJUSTMENT ARRANGEMENT FOR 2R,3R1040	2H.938	1	92

SR.NO.	DESCRIPTION	GROUP NO.	QTY.	PAGE NO.
61	SPIN ON FUEL FILTER & ITS MTG ON HOUSING	3H.241.2	1	93
62	STAMFORD ALTERNATOR 23 KVA 3PH 220V,0.8P.F., 60 Hz, PI 144D,SAE 2 / 11.5"	2H.459	1	94
63	STD CONTROL PANEL 23 KVA 220V 3PH. WITH DSE 6120 MK-II UNIT & GEMS SENSOR FOR SILENT SET	2H.973.3	1	95 TO 102
64	STICKER FOR "KG23WS"	02.710.44	1	103
65	STOP SOLENOID (12V,ENERGIES TO STOP) SINGLE COIL	4H.150.2	1	104
66	SUCTION TUBE	2H.071	1	105
67	SUMP DRAIN ARRANGEMENT (WITHOUT BUSH)	34.098.1	1	106
68	SUPRABHA BAG DIMN LxWxH (2200 x 1200 x 1350)	2H.450.23	1	107
69	THERMOSTAT AND MOUNTING (M14 ADAPATOR ON BOTH END)	3H.061.1	1	108, 109
70	TIE WRAP 200 MM LENGTH	3H.905.07	15	110
71	VALVE ROCKER ASSEMBLY	2H.022	1	111, 112
72	WATER INLET AND OUTLET CONNECTION FOR RADIATOR (STAGE 1)	3H.029.1	1	113
73	WATER PUMP (282.5 CRS)	4H.052	1	114
74	WATER PUMP PULLEY FOR POLY V BELT 6PK (2R TO 4RTA)	4H.1483	1	115
75	WIRING HARNESS ENGINE TO PANEL WITH DSE 6120 MKII UNIT FOR SILENT SET	2H.953.2	1	116
76	WIRING HARNESS FOR CANOPY LAMP & EMERGANCY P.B. FOR SHANTI PROJECT (10,15,20,25 KVA)	38.353.1	1	117
77	WT SENSOR UNIT AND 4-20mA LOP FOR EXPORT (WITHOUT WATER TEMP SWITCH)	46.260.12	1	118
78	SET OF JOINTS	2H.100.10	1	119, 120
79	SET OF WASHERS	2H.074.50	1	121
80	SET OF `O' RINGS	2H.074.30	1	122
81	SET OF BEARINGS		1	123

NOTE: - AS CONTINUOUS IMPROVEMENTS ARE CONTEMPLATED THE ILLUSTRATION AND DESCRIPTIONS ARE NOT BINDING.

TITLE: - AIR CLEANER ASSEMBLY WITH STRAP + RAIN CAP (MAHALE MODEL KFA-01-1-7484)	**GROUP: -** 3H.415.6

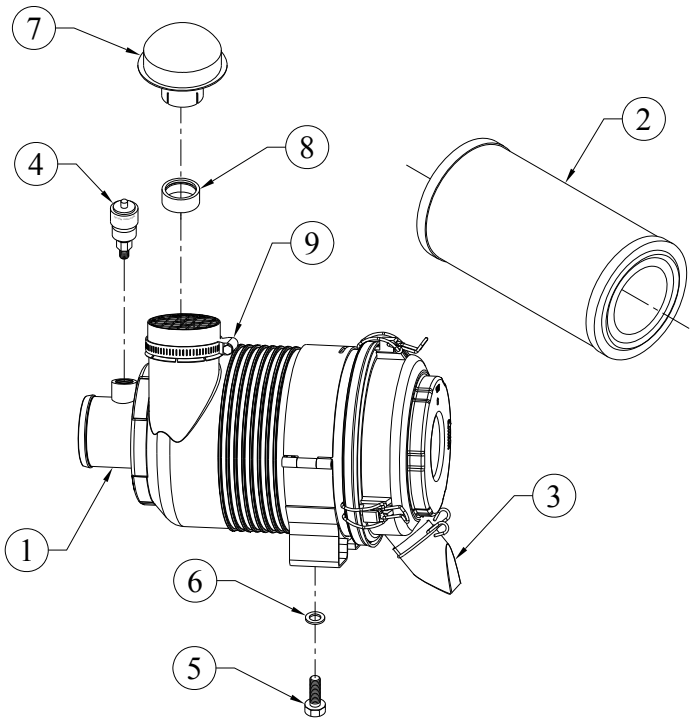

SR.NO.	PART NO.	DESCRIPTION	QTY.	REMARKS
1	3H.415.10.0.00	AIR CLEANER ASSEMBELY 4.5 CUBIC METER(MAHALE MAKE:P-070815/02)	1	CONSISTING OF SR. NO. 2, 3 NOT SUPPLIED LOOSE
2	04.586.03.0.00	MAIN ELEMENT FOR AIR CLEANER	1	
3	6H.411.08.0.00	VACCUATOR VALVE (1878417168)	1	
4	47.113.15.0.00	RESTRICTION INDICATOR - 20"W.G.	1	
5	50.003.10.025.	SET SCREW - M10X1.5X25 - 8.8	2	
6	50.506.10.000.	PLAIN MACHINED WASHER - M10	2	
7	4H.169.01.0.00	INLET CAP (76 DIA. PIPE)	1	
8	04.588.04.0.00	SPACER RING FOR RAIN CAP	1	
9	F6.377.16.0.00	JUPITER T -BOLT CLAMP S/F 83MM O.D	1	

TITLE: - AIR CLNEAR MOUNTING FOR 3H.415.10 .0.00 (2R-ENGINE)	**GROUP: -** 2H.315.1

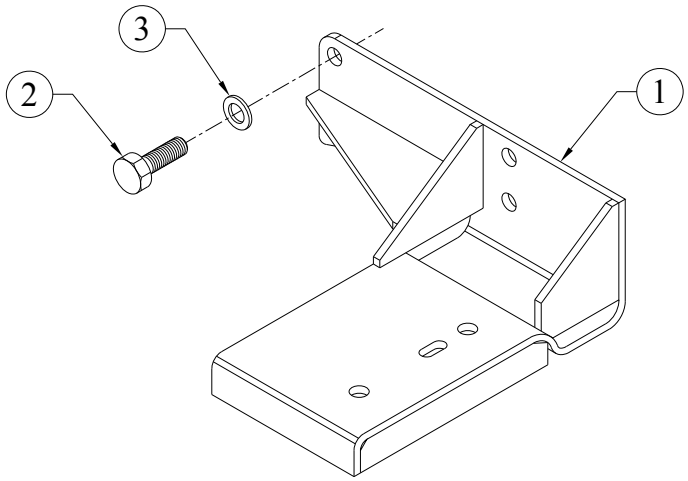

SR.NO.	PART NO.	DESCRIPTION	QTY.	REMARKS
1	4H.404.01.0.00	BRACKET FOR AIR CLEANER (PLASTIC)	1	
2	50.003.10.020.	SET SCREW - M10X1.5X20 - 8.8	4	
3	50.506.10.000.	PLAIN MACHINED WASHER - M10	4	

TITLE: - ALTERNATOR MOUNTING AND BELT GUARD (TURBO) WITH POLY V BELT PULLEY 6PK (2R TO 4RTA)	**GROUP: -** 4H.1484.7

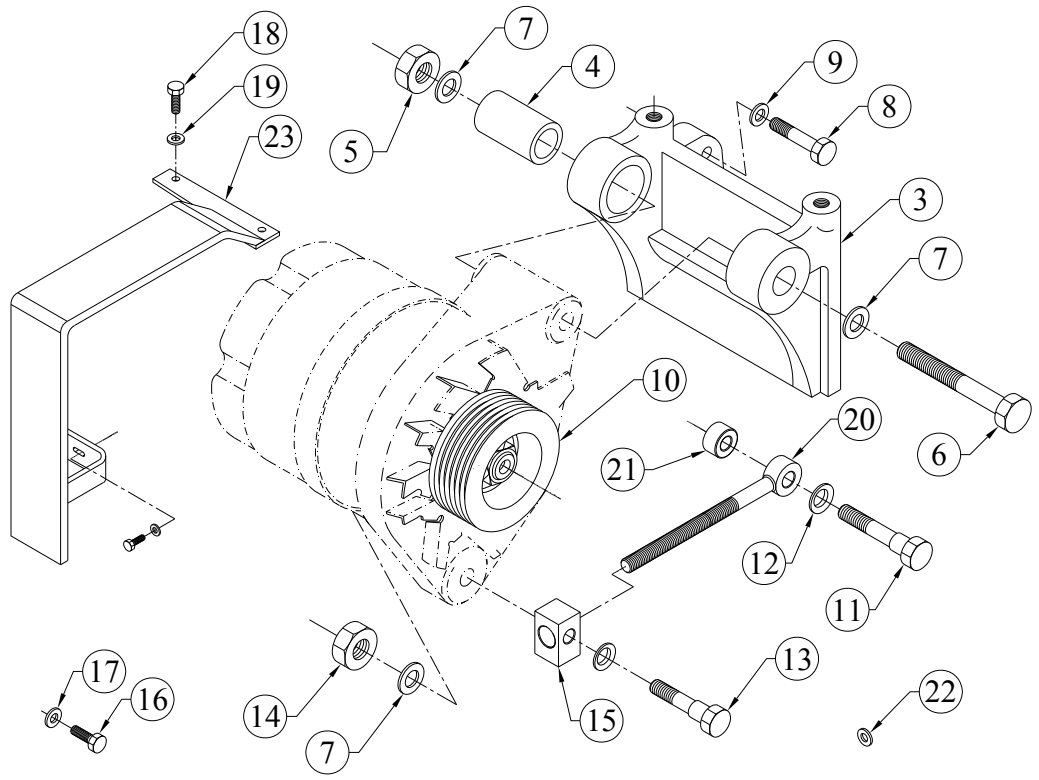

SR.NO.	PART NO.	DESCRIPTION	QTY.	REMARKS
*1	4H.1484.70.0.00	ALTERNATOR MOUNTING KIT FOR POLY V BELT	1	CONSISTING OF SR. NO. 2 & 8 TO 21
*2	4H.044.20.0.00	MOUNTING SUBASLY. FOR ALTERNATOR	1	CONSISTING OF SR. NO. 3 TO 7
3	48.175.07.0.00	BKT.FOR ALT	1	
4	48.067.04.0.00	BUSH FOR ALTERNATOR (IN BRACKET) 32MM	1	
5	50.006.10.000	NUT - M10X1.5 - GR.8	1	
6	48.067.03.7.00	DOWEL BOLT FOR ALTERNATOR M10X1.5 (130MM)	1	
7	50.506.10.000	PLAIN MACHINED WASHER - M10	2	
8	50.003.10.040	SET SCREW - M10X1.5X40 - 8.8	2	
9	50.506.10.000	PLAIN MACHINED WASHER - M10	6	
10	4H.1484.12.0.00	ALTERNATOR PULLEY FOR MICO ALTERNATOR	1	

TITLE: - ALTERNATOR MOUNTING AND BELT GUARD (TURBO) WITH POLY V BELT PULLEY 6PK (2R TO 4RTA)	**GROUP: -** 4H.1484.7

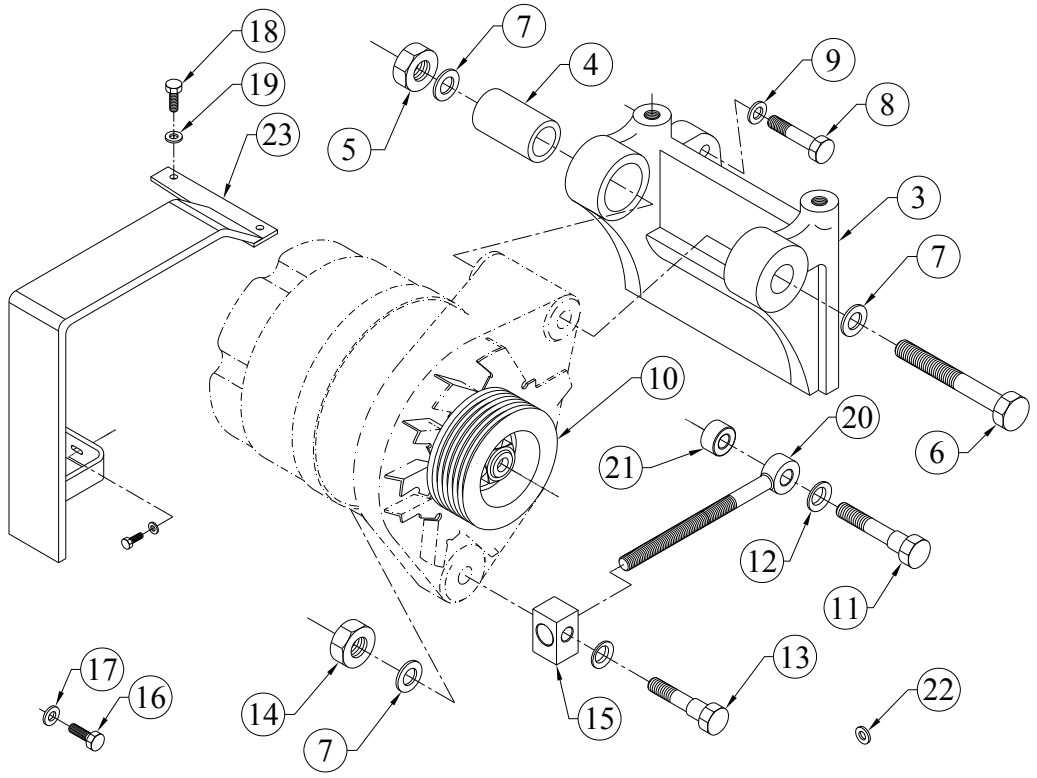

SR.NO.	PART NO.	DESCRIPTION	QTY.	REMARKS
11	4H.198.02.0.00	LOCATING BOLT (FOR EYE BOLT) 65MM	1	
12	50.506.12.000	PLAIN MACHINED WASHER - M12	1	
13	50.002.10.055	SET BOLT - M10X1.5X55 - 8.8	1	
14	50.006.10.000	NUT - M10X1.5 - GR.8	3	
15	4H.329.26.0.00	SWIVEL PIECE	1	
16	50.003.08.016	SET SCREW - M8X1.25X16 - 8.8	1	
17	50.548.08.000	SPL.PLAIN M/CED WASHER	1	
18	50.003.06.012	SET SCREW - M6X1X12 - 8.8	2	
19	50.506.06.000	PLAIN MACHINED WASHER - M6	2	
20	F6.018.19.0.00	EYE BOLT	1	
21	4H.561.01.0.00	SPACER 11 I.D. X 24 O.D. X 25.5 L	1	
22	02.022.06.0.00	WASHER	1	
23	4H.198.07.0.00	BELT GAURD FOR ALTERNATOR (S/F COMBINED GEAR CASING)	1	

TITLE: - ANTIVIBRATION MOUNTING (PGS-1C POLYBOND MAKE) FOR 2R/3R1040	**GROUP: -** 2H.332.1

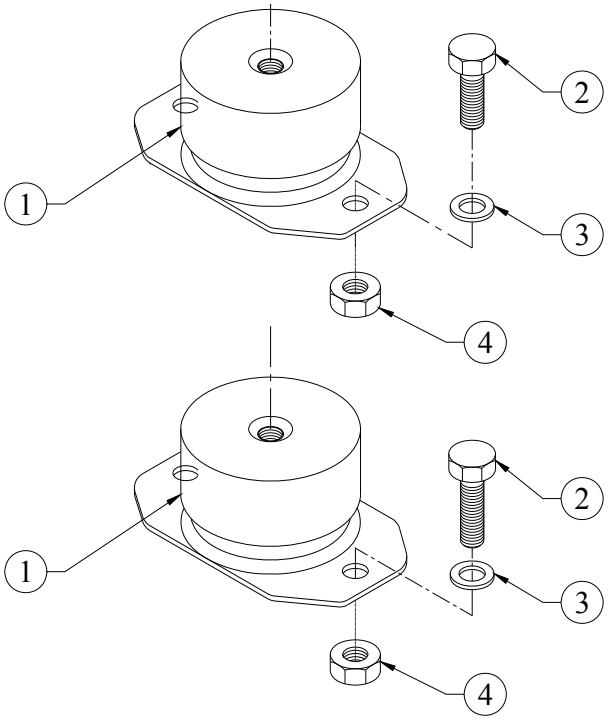

SR.NO.	PART NO.	DESCRIPTION	QTY.	REMARKS
1	2H.332.02.0.00	ANTIVIBRATION MOUNTING (PGS-1C POLYBOND MAKE) FOR 2R/3R1040	4	
2	50.003.12.030.	SET SCREW - M12X1.75X30 - 8.8	8	
3	50.548.12.000.	SPL. PLAIN WASHER - M12	16	
4	50.006.12.000.	NUT - M12X1.75 - GR.8.8	8	

TITLE: - BASE PLATE ASSEMBLY FOR 2R1040 SILENT GENSET	**GROUP: -** 2H.896.1

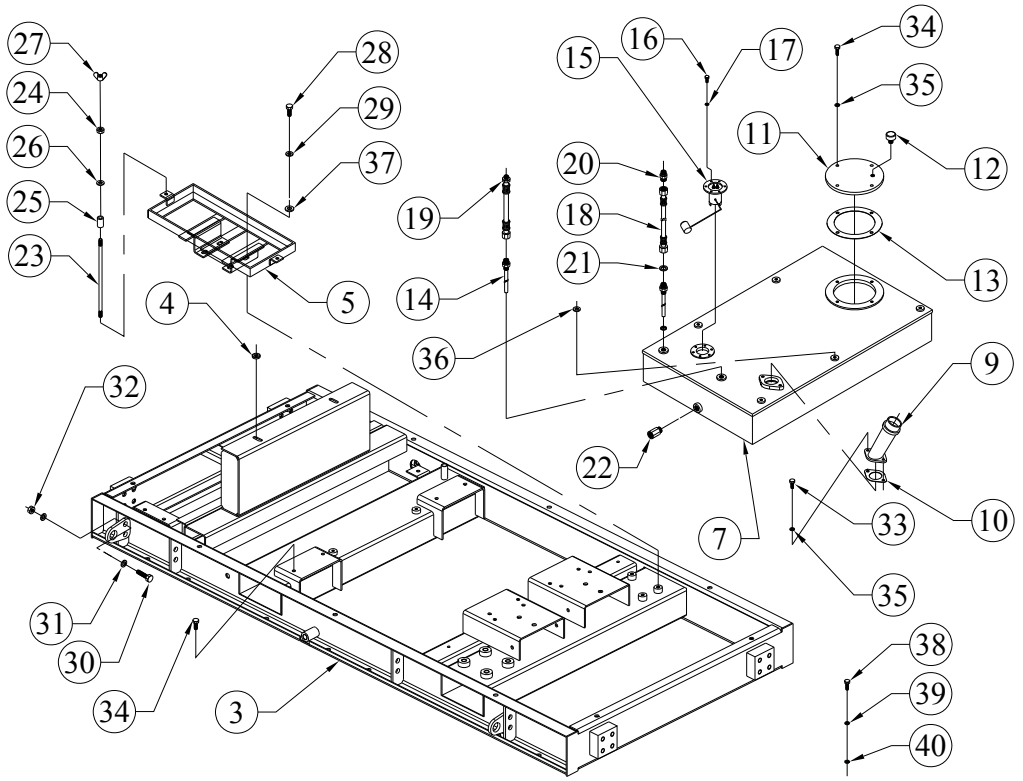

SR.NO.	PART NO.	DESCRIPTION	QTY.	REMARKS
*1	2H.896.40.0.00	ASSEMBLY OF BASE PLATE & FUEL TANK	1	CONSISTING OF SR. NO.- 2 , 6 & 8
*2	2H.896.60.0.00	BASE PLATE FOR 2R1040 STANDARD SILENT P14D1 / P120D1, P14E1, P04H1 ALT SIZE ALT FRAME	1	CONSISTING OF SR. NO. 3 TO 5
3	2H.218.07.0.00	BASE PLATE FOR 20 KVA 2R1040+P1 ALT. CLOSE COUPLED SILENT GENSET.	1	
4	4H.970.02.0.00	HARD WASHER (FOR M12 BOLT)	2	
5	2H.218.05.0.00	BATTERY BRACKET FOR 2R1040 STANDARD SILENT GENSET	1	
*6	2H.896.20.0.00	FUEL TANK ASSEMBLY FOR 2R1040 SILENT GENSET	1	CONSISTING OF SR. NO. 7
7	2H.218.03.0.00	FUEL TANK 40 LITERS CAPACITY FOR 2R1040 STANDARD SILENT GENSET	1	
*8	84.000.08.4.10	CANOPY NAME PLATES	2	NOT ILLUSTRATED

TITLE: - BASE PLATE ASSEMBLY FOR 2R1040 SILENT GENSET	**GROUP: -** 2H.896.1

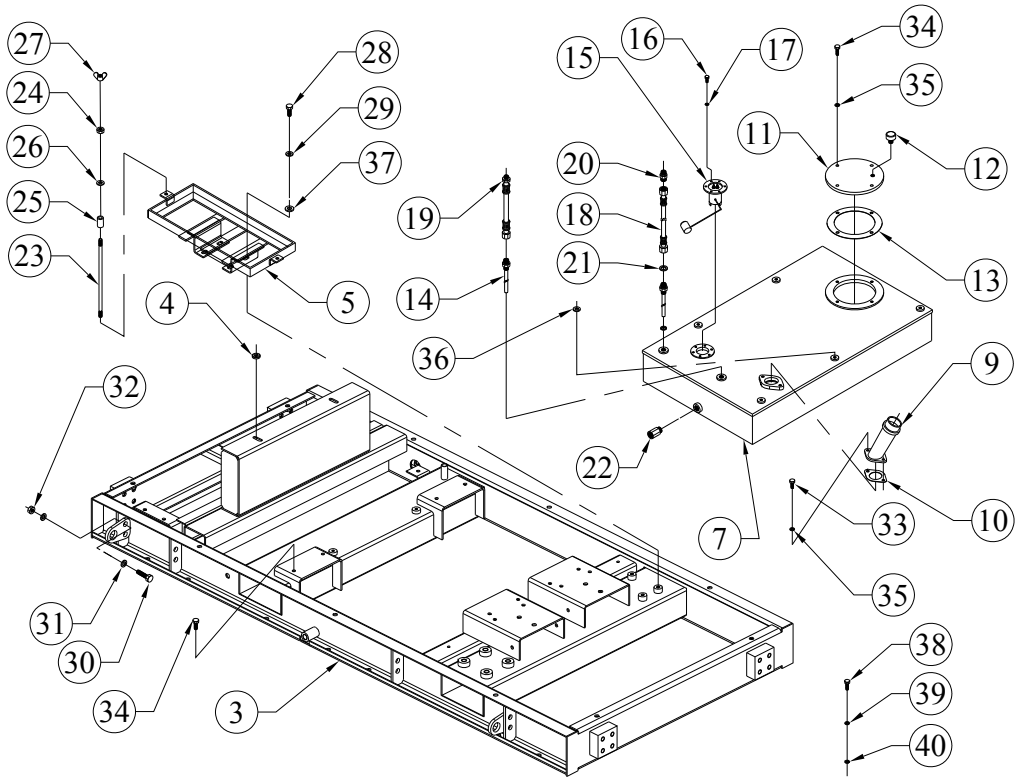

SR.NO.	PART NO.	DESCRIPTION	QTY.	REMARKS
9	3H.283.06.0.00	SPOUT (FOR FUEL FILLING)	1	
10	4H.039.02.0.00	JOINT FOR W.I.CONN.& THERMO.HSG.	1	
11	KV2.515.02.0.00	COVER PLATE FOR FUEL TANK (S/F BREATHER)	1	
12	3H.173.05.0.00	BREATHER FOR FUEL TANK	1	
13	03.774.04.0.00	JOINT FOR COVER(AUX.L.O.SUMP)	1	
14	04.623.06.0.00	INLET AND OUTLET FUEL CONNECTION 110 MM HEIGHT(UN TYPE/MALE TYPE)	2	
15	2H.850.14.0.00	FUEL LEVEL SENSOR 110MM HEIGHT(PRICOL C20 5289)	1	
16	50.077.05.016	S.S.HEX BOLT M5x16	10	
17	50.506.05.000	PLAIN MACHINED WASHER - M5	6	
18	3H.181.04.0.00	FUEL PIPE (INLET)M12*1.5MAI PLUG *M16*1.5 UNION FOR 10 TO 125 KVA TRAILER MOUNTED (550 mm LENGTH)	1	

TITLE: - BASE PLATE ASSEMBLY FOR 2R1040 SILENT GENSET	**GROUP: -** 2H.896.1

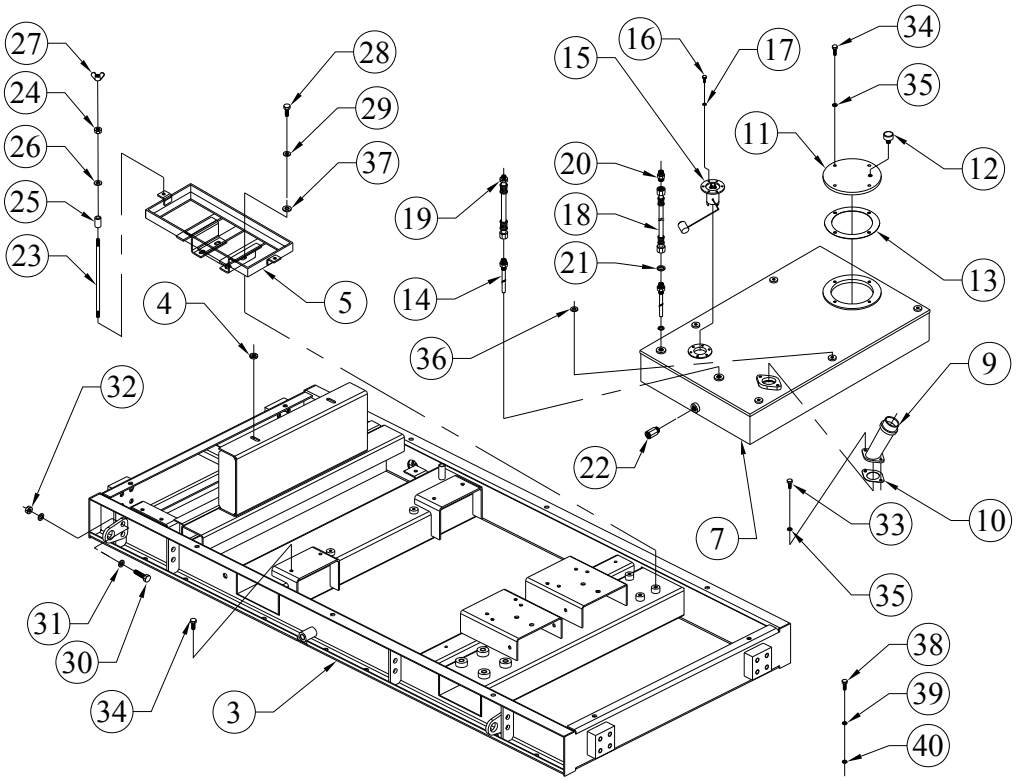

SR.NO.	PART NO.	DESCRIPTION	QTY.	REMARKS
19	3H.181.05.0.00	FUEL PIPE (RETURN) M12x1.5 MALE PLUG x M16x1.5UNION	1	
20	4H.486.05.0.00	ADAPTOR M14 X M16 U	1	
21	50.508.12.000	COPPER WASHER (14X20)	3	
22	2H.218.15.0.00	ADAPTOR FOR TANK DRAIN	1	
23	2H.228.02.0.00	BATTERY CLAMPING STUD (M8)	2	
24	50.006.08.000	NUT- M8X1.25 - GR.8	2	
25	4H.493.08.0.00	SPACER FOR CONTROL PANNEL (9MM I.D. & 15MM O.D. 10MM L)	2	
26	50.548.08.000	SPL.PLAIN M/CED WASHER	14	
27	50.047.04.000	BRASS WING NUT M8.	2	
28	50.003.10.030	SET SCREW - M10X1.5X30 - 8.8	12	
29	50.548.10.000	SPECIAL PLAIN WASHER - M10	8	
30	50.002.14.050	SET BOLT - M14X2X50 - 8.8	8	
31	50.506.14.000	PLAIN MACHINED WASHER - M14	16	
32	50.006.14.000	NUT - M14X2 - GR.8.8	8	
33	50.003.08.016	SET SCREW - M8X1.25X16 - 8.8	10	
34	50.003.08.020	SET SCREW - M8X1.25X20 - 8.8	6	

TITLE: - BASE PLATE ASSEMBLY FOR 2R1040 SILENT GENSET	**GROUP: -** 2H.896.1

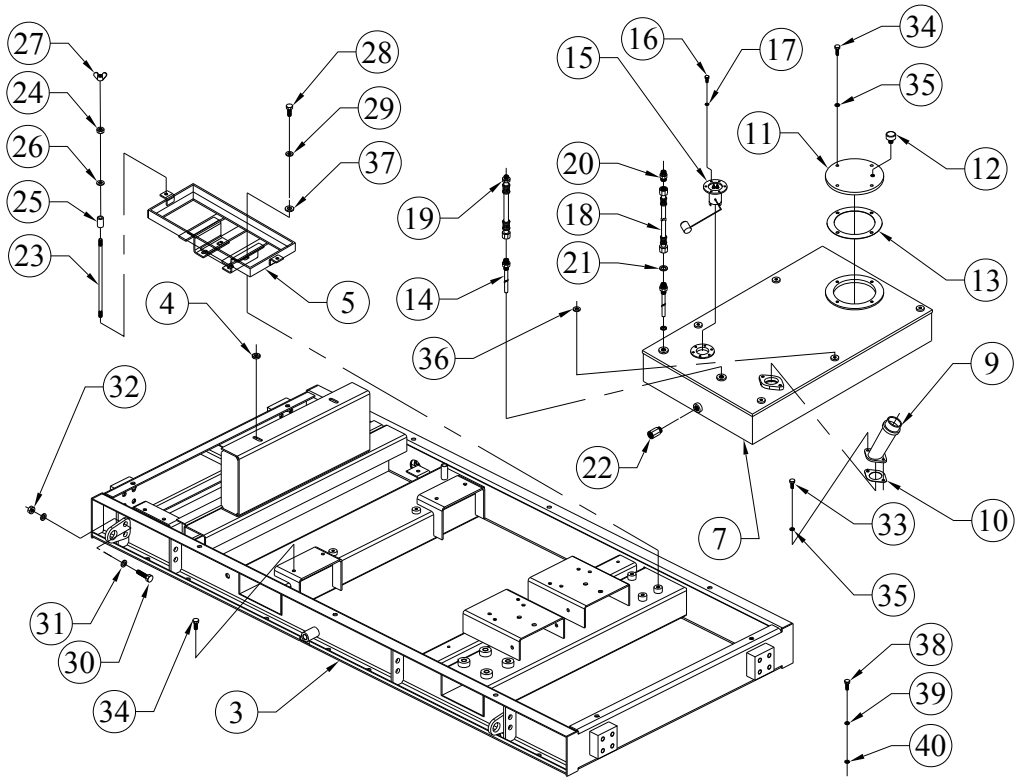

SR.NO.	PART NO.	DESCRIPTION	QTY.	REMARKS
35	50.506.08.000.	PLAIN MACHINED WASHER - M8	6	
36	50.548.06.000.	WASHER	4	
37	50.506.10.000.	PLAIN MACHINED WASHER - M10	4	
38	50.003.12.040.	SET SCREW - M12X1.75X40 - 8.8	2	
39	50.548.12.000.	SPL. PLAIN WASHER - M12	2	
40	50.505.12.000.	SPRING WASHER - M12	2	

TITLE: -BATTERY CABLE 35 SQ. RED & BLUE WITH SUITABLE LUG APP. LENGTH 1M (ONE SIDE BATTERY LUG & OTHER SIDE ROUND LUG)	**GROUP: -** 3H.207.1

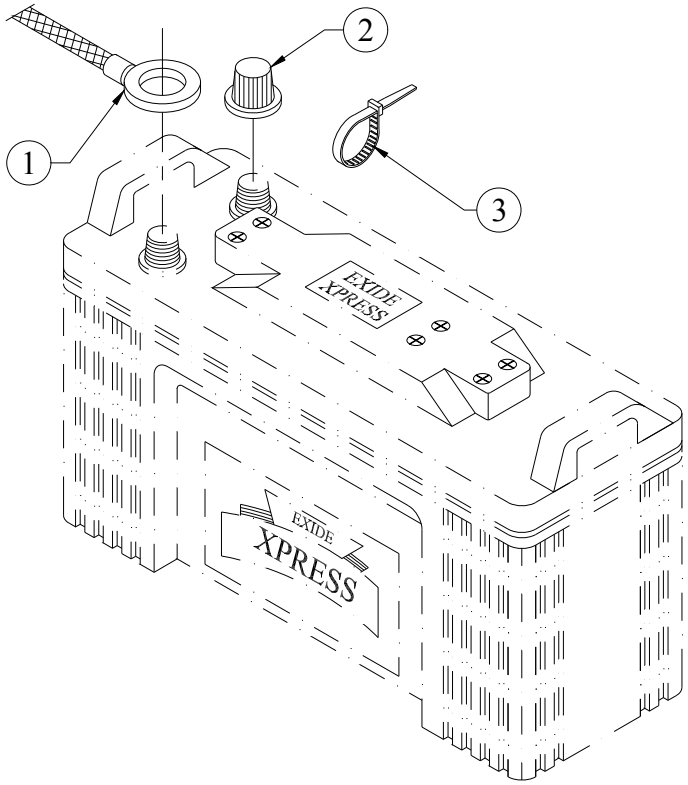

SR.NO.	PART NO.	DESCRIPTION	QTY.	REMARKS
1	3H.207.10.0.00	BATTERY CABLE 35 SQ. RED & BLUE WITH SUITABLE LUG APP. LENGTH 1M(ONE SIDE BATTERY LUG & OTHER SIDE ROUND LUG) FOR ITI	1	
2	4H.923.01.0.00	BATTERY TERMINAL CAP RED & BLACK	2	
3	3H.905.07.0.00	TIE WRAP 200 MM LENGTH	10	

TITLE: - BREATHER PIPE FOR CANOPY GENSET	**GROUP: -** 2H.164.1

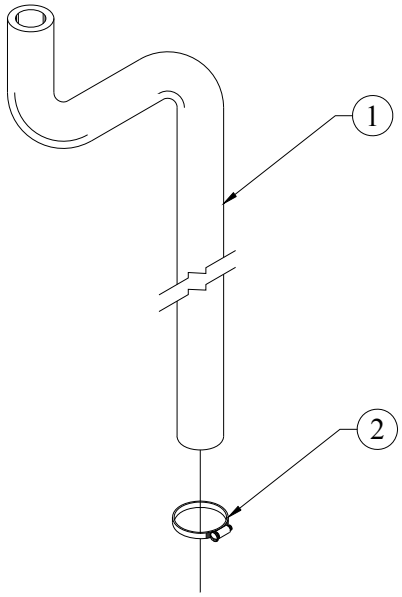

SR.NO.	PART NO.	DESCRIPTION	QTY.	REMARKS
1	2H.164.01.0.00	BREATHER PIPE FOR 2R1040 SILENT SET	1	
2	49.097.08.0.00	HOSE CLIP SIZE NO 1 28X30	1	

TITLE: - BREATHER PIPE FOR CANOPY GENSET	**GROUP: -** 2H.164.3

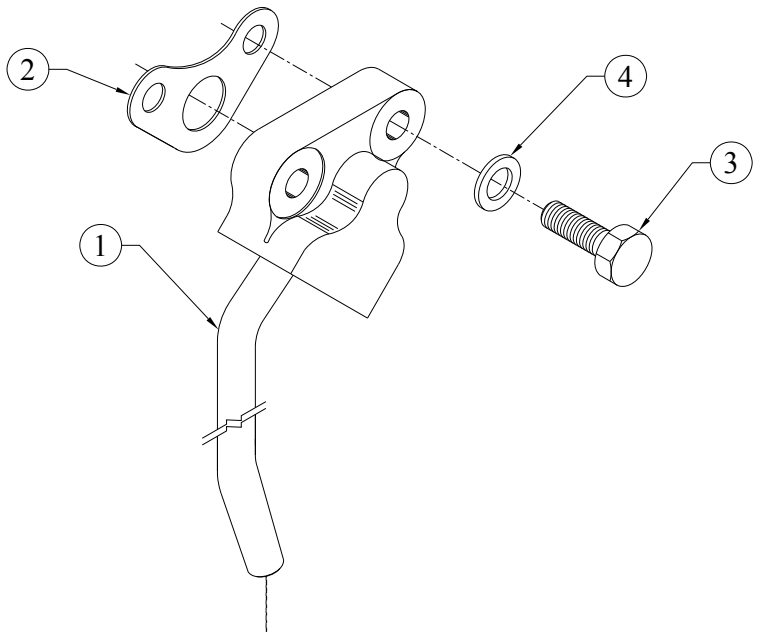

SR.NO.	PART NO.	DESCRIPTION	QTY.	REMARKS
1	4H.424.10.0.00	SUB ASSLY OF BREATHER PIPE	1	
2	4H.140.11.0.00	JOINT (ADAPTOR FOR BREATHER)	1	
3	50.003.08.025.	SET SCREW - M8X1.25X25 - 8.8	2	
4	50.506.08.000.	PLAIN MACHINED WASHER - M8	2	

TITLE:- CAMSHAFT	**GROUP:-** 2H.003

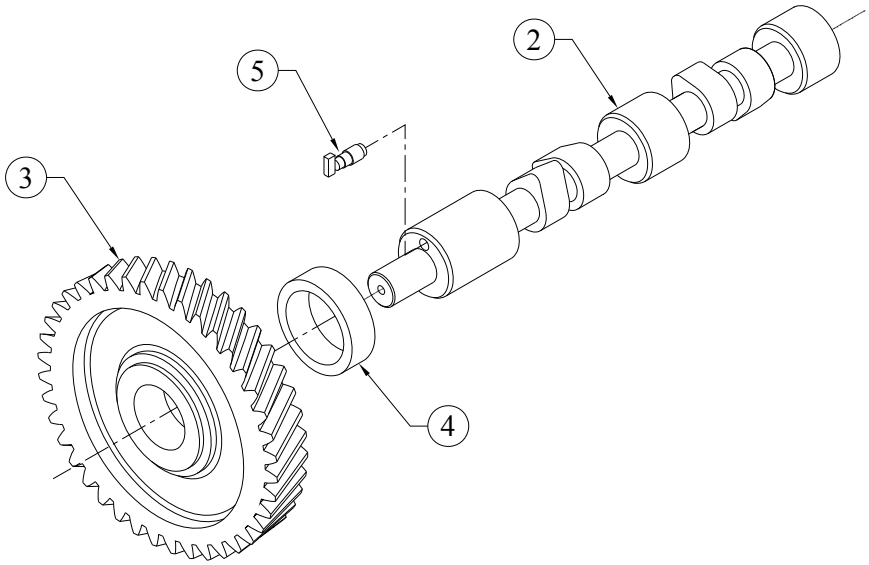

SR.NO.	PART NO.	DESCRIPTION	QTY.	REMARKS
*1	2H.003.10.0.00	CAMSHAFT ASSEMBLY	1	CONSISTING OF SR. NO. 2 & 3
2	2H.003.01.0.00	CAMSHAFT	1	NOT SUPPLIED LOOSE
3	03.006.04.0.00	CAM SHAFT GEAR	1	NOT SUPPLIED LOOSE
4	4H.003.02.0.00	THRUST WASHER FOR CAM SHAFT	1	NOT SUPPLIED LOOSE
5	03.117.02.0.00	PIN	1	

TITLE: - CANOPY FOR 20 KVA SILENT GENSET (NEW COMBODIA SINGLE PHASE)	**GROUP: -** 2H.221

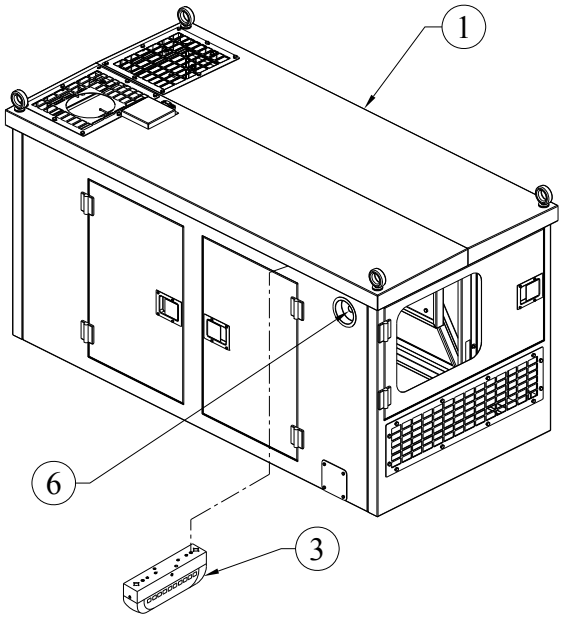

SR.NO.	PART NO.	DESCRIPTION	QTY.	REMARKS
1	2H.221.10.0.00	CANOPY ASSEMBLY FOR 20 KVA SILENT GENSET (NEW COMBODIA SINLE PHASE)	1	
*2	D3.345.11.0.00	DOOR RUBBER BEADING(MTRs) BULB SIZE - 14MM	16	NOT ILLUSTRATED
3	4H.865.24.0.00	CANOPY LAMP, 12 VDC WITH HOLDER ASSEMBLY.	2	
*4	2H.198.01.0.00	DP MAKE FOAM 40 DENSITY,THK 40 MM X 1M X 2M	3	NOT ILLUSTRATED
*5	02.472.11.0.00	DOOR GASKET FOR KG CANOPY (NEOPRENE RUBBER BIDING) 5 METER	4	NOT ILLUSTRATED
6	6H.880.13.0.00	EMERGENCY STOP PB(WITH NC ELEMENT)SCHNEIDER/TELEMECANIQUE MAKE HORMONY RANGE RELEASE MUSHROOM TYPE XB5A542N	1	

TITLE: - CHARGING ALTERNATOR 12V	**GROUP: -** 3H.315.2

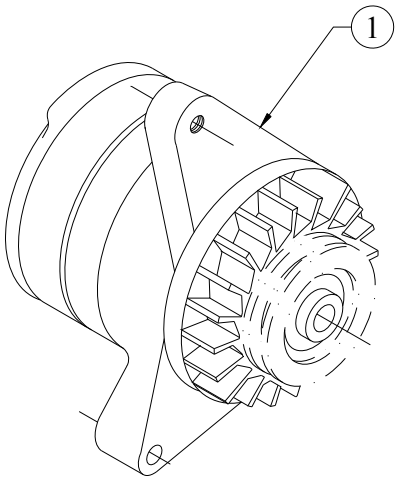

SR.NO.	PART NO.	DESCRIPTION	QTY.	REMARKS
1	3H.315.03.0.PR	ASSEMBLY CHARGING ALTERNATOR 35A, MICO MAKE K1 MODEL 13.5V REGULATOR WITH BATTERY SENSING	1	

TITLE: - COMBINED LEAK OFF PIPE (M12 UNION)	**GROUP: -** 2H.088.1

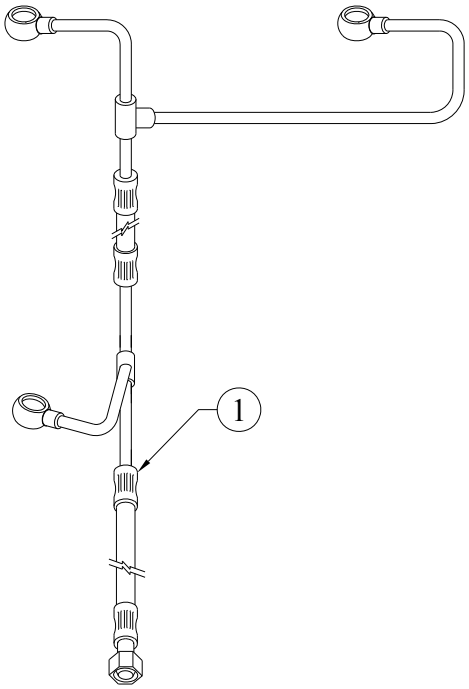

SR.NO.	PART NO.	DESCRIPTION	QTY.	REMARKS
1	2H.088.20.0.00	COMBINED LEAK OFF PIPE (M12 UNION)	1	

TITLE: - CRANK PULLEY FOR POLY V BELT 6PK (2R TO 4RTA)	**GROUP: -** 4H.1295.5

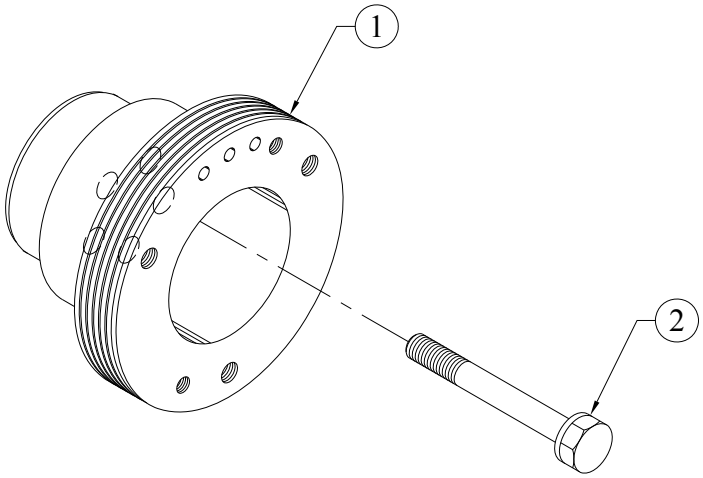

SR.NO.	PART NO.	DESCRIPTION	QTY.	REMARKS
1	4H.1295.06.0.00	CRANK SHAFT PULLEY S/F GEAR CASING	1	
2	4H.370.02.0.00	BOLT FOR CRANK PULLEY	5	

TITLE: - CRANKSHAFT	**GROUP: -** 2H.966

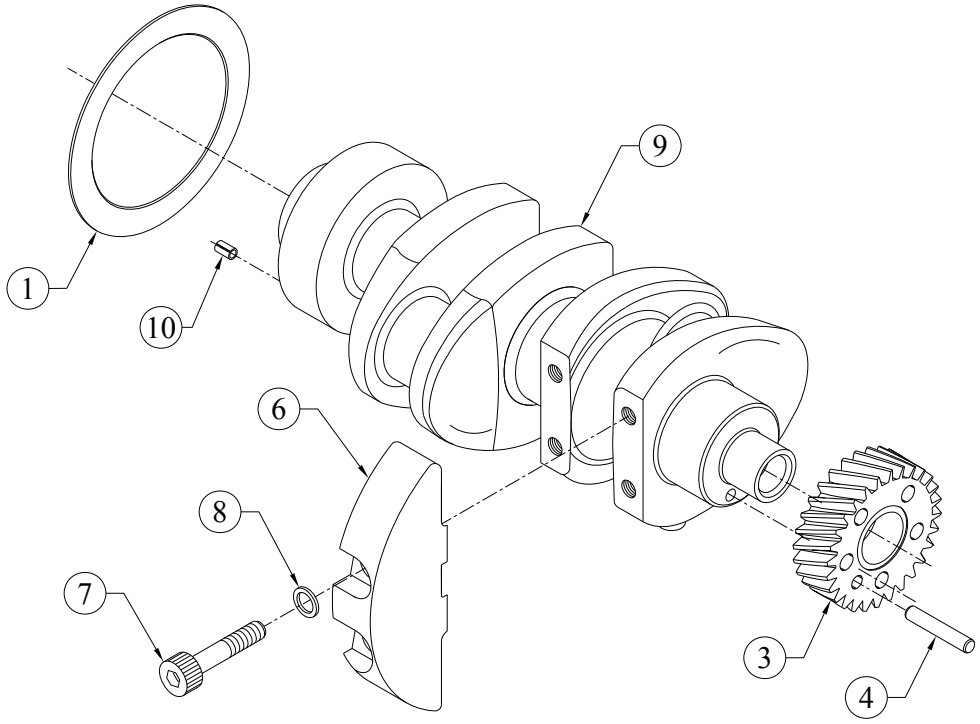

SR.NO.	PART NO.	DESCRIPTION	QTY.	REMARKS
1	P2.020.09.0.00	DEFLECTOR FOR OIL SEAL	1	NOT SUPPLIED LOOSE
*2	2H.966.10.0.00	CRANKSHAFT WITH GEAR	1	CONSISTING OF SR. NO. 3 TO 5
3	4H.371.02.0.00	CRANKSHAFT GEAR	1	
4	50.401.06.025.	DOWEL PIN	2	
*5	2H.966.20.0.00	CR'SHAFT ASSLY.W/O CR'GEAR	1	CONSISTING OF SR. NO. 6 TO 9 NOT SUPPLIED LOOSE
6	02.053.02.0.00	HA2 COUNTER WEIGHT (F)	4	NOT SUPPLIED LOOSE
7	04.005.12.0.00	SOCKET HEAD BOLT - M12X1.75X60 -10.9	8	
8	02.005.04.0.00	HARD WASHER (13 I.D X 21O.D X 1.5 TH)	8	
9	2H.966.01.0.00	CRANKSHAFT (FINISH)	1	NOT SUPPLIED LOOSE
10	50.540.11.018.	SPRING DOWEL	1	

TITLE: - CYLINDER HEAD	**GROUP: -** 2H.983

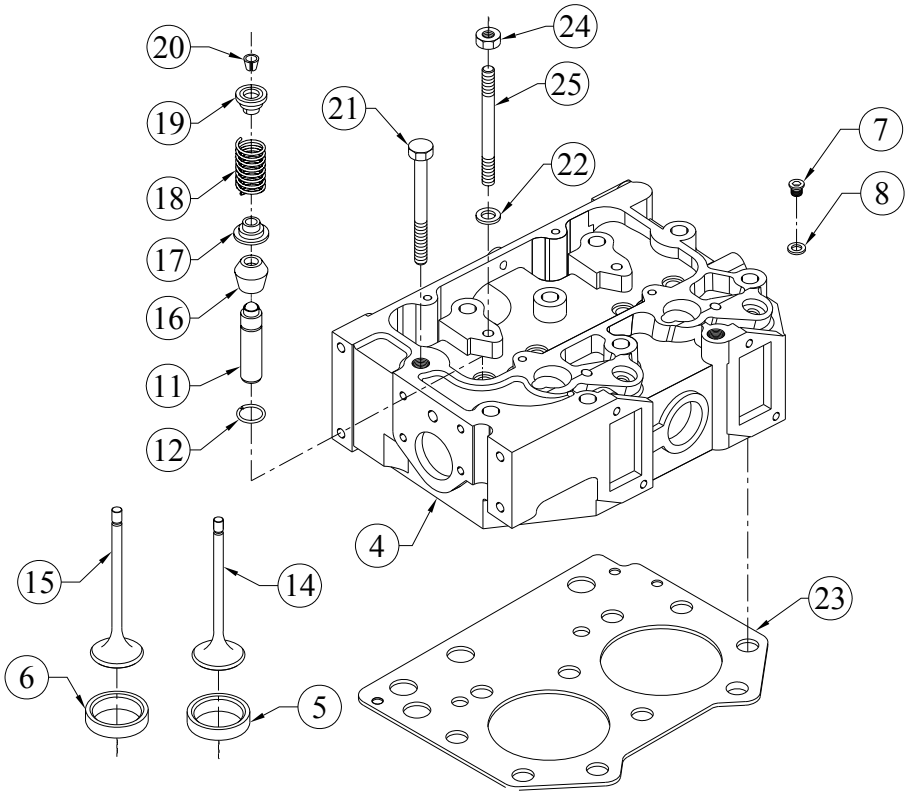

SR.NO.	PART NO.	DESCRIPTION	QTY.	REMARKS
*1	2H.983.30.0.PR	CYLINDER HEAD ASSEMBLY (SINGLE JACKET)	1	CONSISTING OF SR.NO. 2,14 TO 25
*2	2H.983.10.0.PR	CYLINDER HEAD SUB-ASSEMBLY (SINGLE JACKET)	1	CONSISTING OF SR.NO. 3
*3	2H.983.20.0.PR	CYLINDER HEAD SUB-ASSEMBLY (SINGLE JACKET)	1	CONSISTING OF SR.NO. 4 TO 9
4	2H.983.01.0.PR	CYLINDER HEAD	1	
5	4H.007.03.9.00	VALVE SEAT INSERT (INLET)(SEMIFINISH)	2	
6	4H.007.04.9.00	VALVE SEAT INSERT (EXHAUST)	2	
7	50.610.24.000.	CORE PLUG	1	
8	50.508.27.000.	COPPER WASHER (24X29)	1	
*9	4H.007.39.0.00	ASSEMBLY OF SEMIFINISH VALVE GUIDE & SNAP RING	4	CONSISTING OF SR.NO. 10
*10	4H.007.38.0.00	ASSEMBLY OF SEMIFINISH VALVE GUIDE & SNAP RING	1	CONSISTING OF SR.NO. 11,12

TITLE: - CYLINDER HEAD	**GROUP: -** 2H.983

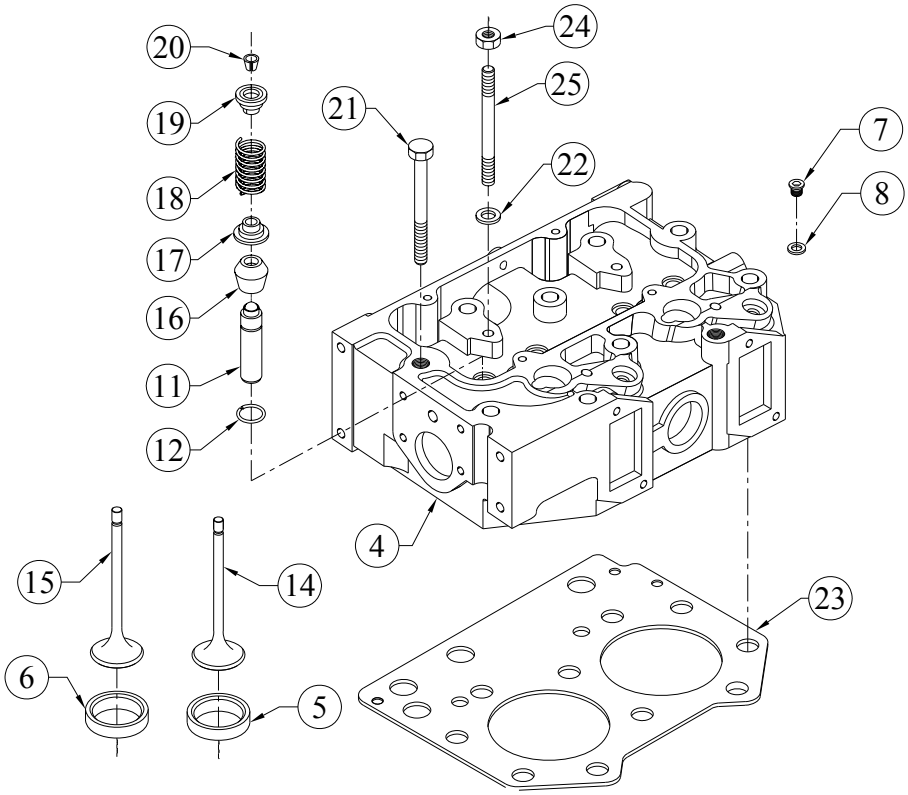

SR.NO.	PART NO.	DESCRIPTION	QTY.	REMARKS
11	4H.007.02.9.00	VALVE GUIDE (SEMI-FINISH)	1	
12	02.022.18.0.00	WIRE SNAP RING	1	
*13	4H.007.40.0.00	INLET & EXHAUST VALVE PAIR	1	CONSISTING OF SR. NO. 14, 15
14	4H.007.05.0.00	INLET VALVE.	2	
15	4H.007.06.0.00	EXHAUST VALVE.	2	
16	06.631.02.0.00	VALVE SEAL	4	
17	34.013.13.0.00	CUP FOR VALVE SPRING.	4	
18	02.022.13.0.00	VALVE SPRING	4	
19	02.022.11.0.00	VALVE CUP	6	
20	02.022.12.0.00	VALVE COLLET	8	
21	4H.007.07.0.00	BOLT FOR CYLINDER HEAD.	10	
22	50.506.10.000.	PLAIN MACHINED WASHER - M10	2	
23	P1.007.09.0.00	CYL HEAD GASKET FOR 2 CYL ENGINE (THICKNESS 1.22)	1	
24	50.006.10.000.	NUT - M10X1.5 - GR.8	2	
25	50.010.10.070.	STUD - M10X1.5X70 - 8.8	2	

TITLE: -CYLINDER LINER. (105 DIA)	**GROUP: -** 2H.008

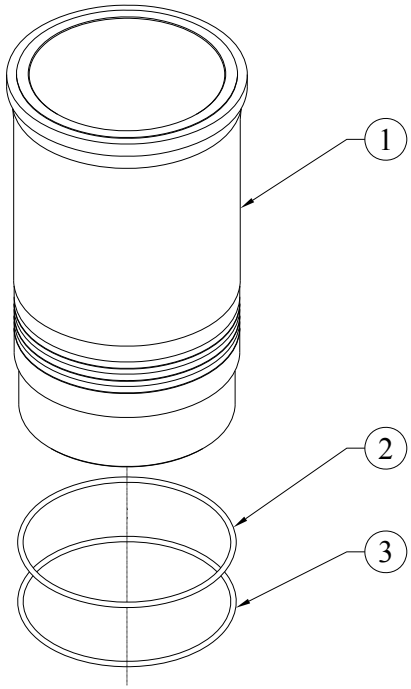

SR.NO.	PART NO.	DESCRIPTION	QTY.	REMARKS
1	2H.008.01.0.00	CYLINDER LINER (105mm DIA.)A-GROUP	1	
2	2H.008.07.0.00	O RING (FOR CYL.LINER)	2	
3	2H.008.11.0.00	O RING FOR CYLINDER LINER (VITON MATERIAL)	1	

TITLE: - DELIVERY BODY	**GROUP: -** 2H.013

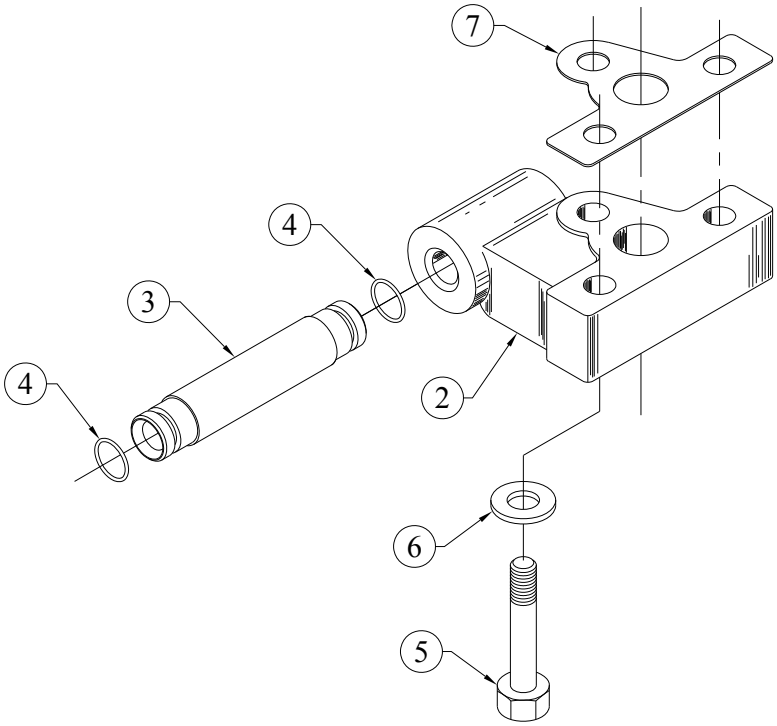

SR.NO.	PART NO.	DESCRIPTION	QTY.	REMARKS
*1	2H.013.10.0.00	DELIVERY BODY ASSEMBLY	1	CONSISTING OF SR.NO. 2 TO 4
2	2H.013.01.0.00	DELIVERY BODY(FINISH)	1	
3	2H.014.01.0.00	DELIVERY TUBE	1	
4	2H.014.02.0.00	O RING(FOR DELIVERY TUBE)	2	
5	50.002.08.045.	SET BOLT - M8X1.25X45 - 8.8	3	
6	50.506.08.000.	PLAIN MACHINED WASHER - M8	3	
7	2H.013.11.0.00	JOINT FOR DELIVERY BODY	1	

TITLE :- DIP-STICK	**GROUP :-** 03.036

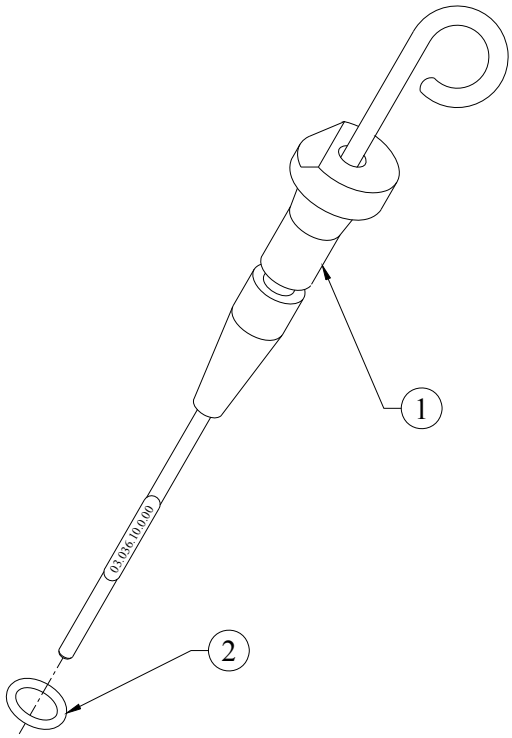

SR.NO.	PART NO.	DESCRIPTION	QTY.	REMARKS
1	03.036.10.0.00	DIPSTICK ASSLY.	1	
2	03.036.01.0.00	O RING - DIPSTICK (2X5, 21515 OR 21511)	1	

TITLE: - ENGINE MOUNTING FOOT (FOR PACKING PURPOSE)	**GROUP: -** 2H.124

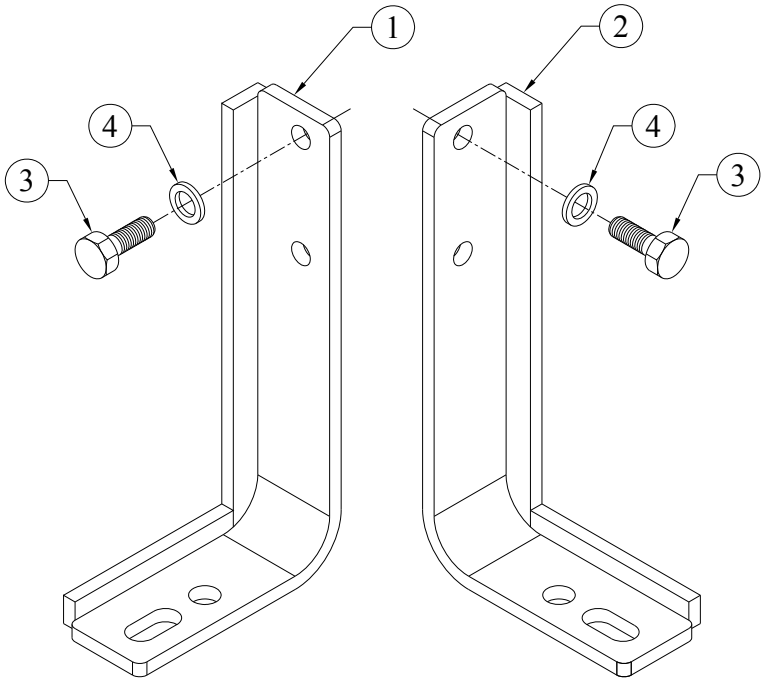

SR.NO.	PART NO.	DESCRIPTION	QTY.	REMARKS
1	2H.124.03.0.00	CRANKCASE FOOT(GEAR END,FUEL PUMP SIDE)	1	
2	2H.124.04.0.00	CRANKCASE FOOT(GEAR END,STARTER SIDE)	1	
3	50.003.12.030.	SET SCREW - M12X1.75X30 - 8.8	4	
4	50.506.12.000.	PLAIN MACHINED WASHER - M12	4	

TITLE: - ENGINE MTG.FOOT (G.E SIDE)	**GROUP: -** 4H.228

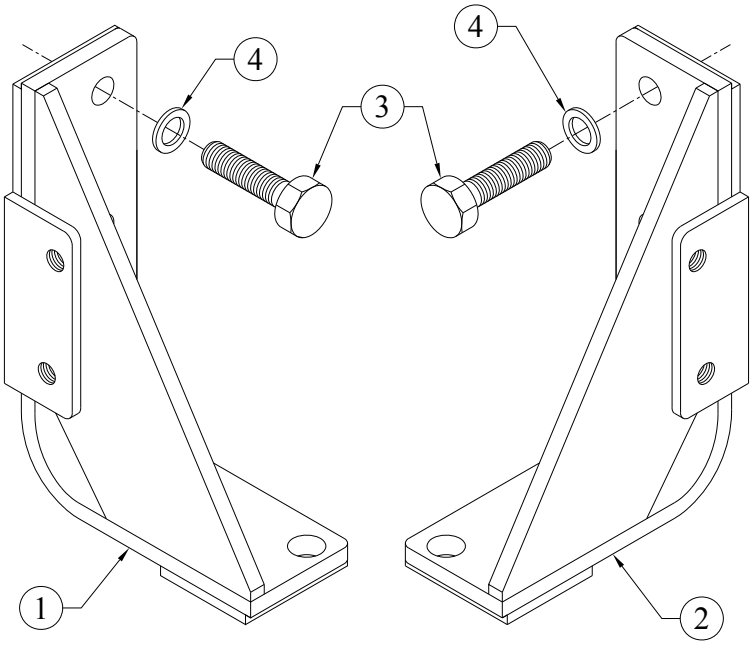

SR.NO.	PART NO.	DESCRIPTION	QTY.	REMARKS
1	4H.228.01.0.00	CRANKCASE FOOT (F P SIDE 225 HT.)	1	
2	4H.228.02.0.00	CRANKCASE FOOT (STARTER SIDE 225 HT.)	1	
3	50.003.12.035.	SET SCREW - M12X1.75X35 - 8.8	4	
4	02.005.04.0.00	HARD WASHER (13 I.D X 21O.D X 1.5 TH)	4	

TITLE: - EXHAUST PIPING FOR 23 KVA (SAUDI)	**GROUP: -** 2H.162.4

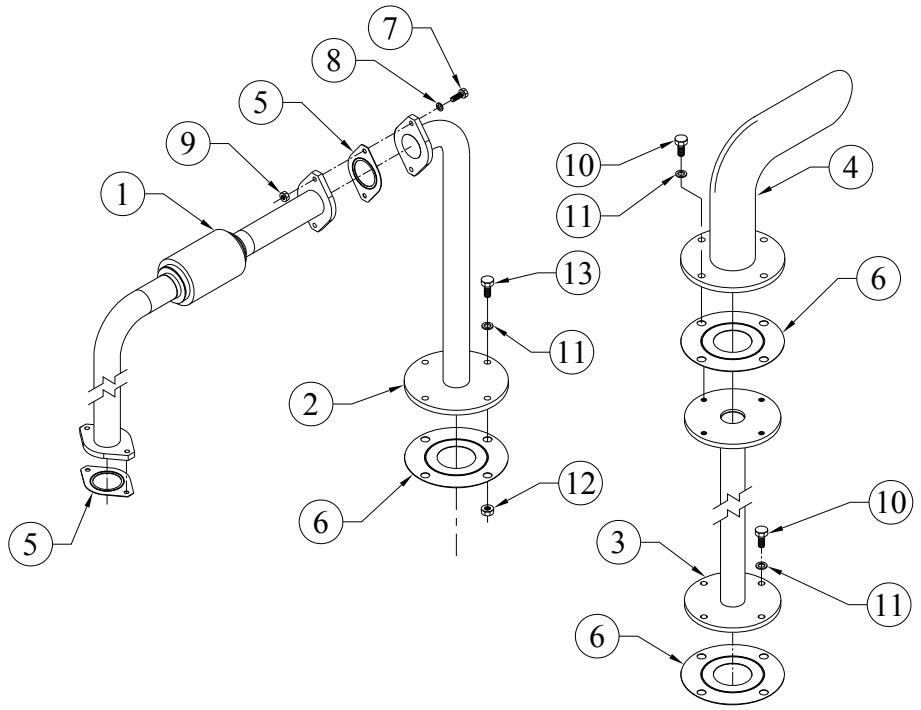

SR.NO.	PART NO.	DESCRIPTION	QTY.	REMARKS
1	2H.162.25.0.00	EXHAUST PIPE FOR 2R1040 SILENT GENSET	1	
2	2H.162.20.0.00	EXHAUST PIPE-2 FROM BELLOW TO SILENCER	1	
3	2H.162.03.0.00	EXHAUST OUTLET PIPE FOR 17.5 KVA SILENT SET	1	
4	3H.518.03.0.PR	TAIL PIPE	1	
5	34.107.06.0.00	JOINT FOR ADAPTOR ON EX.MANIFOLD - SS MATERIAL	2	
6	3H.160.17.0.00	JOINT FOR EXHAUST SILENCER WITH(174 OD)S/F UN SHANTI	3	
7	50.003.08.035.	SET SCREW - M8X1.25X35 - 8.8	2	
8	50.506.08.000.	PLAIN MACHINED WASHER - M8	4	
9	50.006.08.000.	NUT- M8X1.25 - GR.8	2	
10	50.003.10.040.	SET SCREW - M10X1.5X40 - 8.8	8	
11	50.506.10.000.	PLAIN MACHINED WASHER - M10	20	
12	50.006.10.000.	NUT - M10X1.5 - GR.8	8	
13	50.003.10.035.	SET SCREW - M10X1.5X35 - 8.8	4	

TITLE: - EXHAUST ADAPTOR FOR 2R1040 UPWARD OPENING	**GROUP: -** 2H.115

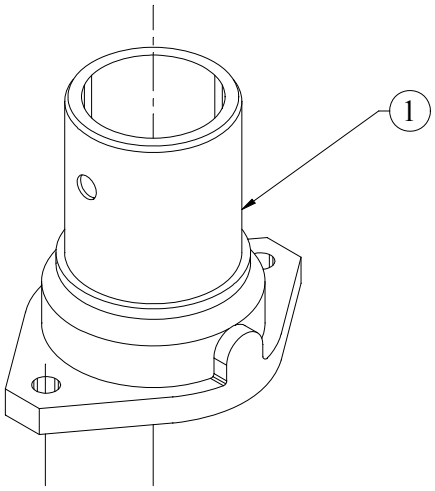

SR.NO.	PART NO.	DESCRIPTION	QTY.	REMARKS
1	46.148.01.0.00	ADAPTOR FOR EXH SILENCER	1	

TITLE: - EXHAUST MANIFOLD (CENTRAL OPENING)	**GROUP: -** P1.036

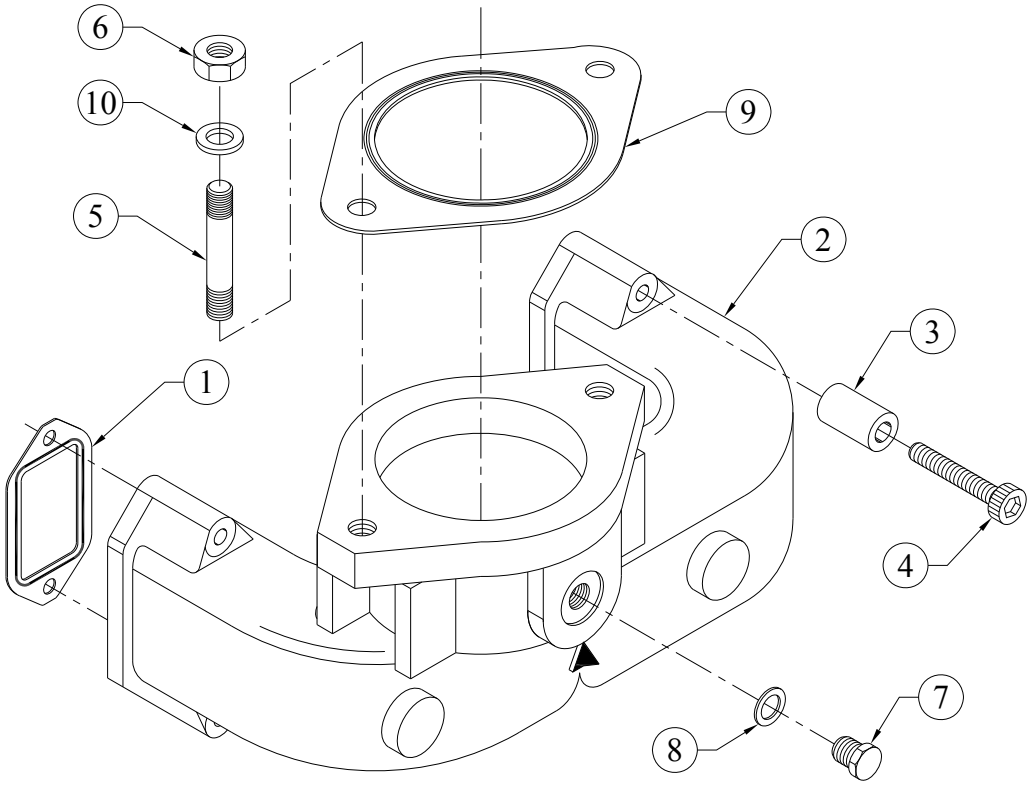

SR.NO.	PART NO.	DESCRIPTION	QTY.	REMARKS
1	P2.106.01.0.00	S.S. JOINT FOR EXHAUST MANIFOLD	2	
2	P1.036.01.0.00	EXHAUST MANIFOLD	1	
3	4H.107.02.0.00	SPACER(FOR EXT.MANIFOLD)	4	
4	50.011.08.075.	SOCKET HEAD SCREW - M8X1.25X75 - 8.8	4	
5	50.010.08.025.	STUD - M8X1.25X025 - 8.8	2	
6	50.080.08.000.	NUT (SS) - M8x1.25	2	
7	50.610.10.000.	CORE PLUG	1	
8	50.508.08.000.	COPPER WASHER (10X16)	1	
9	34.107.06.0.00	JOINT FOR ADAPTOR ON EX.MANIFOLD - SS MATERIAL	1	
10	50.506.08.000.	PLAIN MACHINED WASHER - M8	2	

TITLE: - FLYWHEEL ASSEMBLY-PG	**GROUP: -** 03.050.1

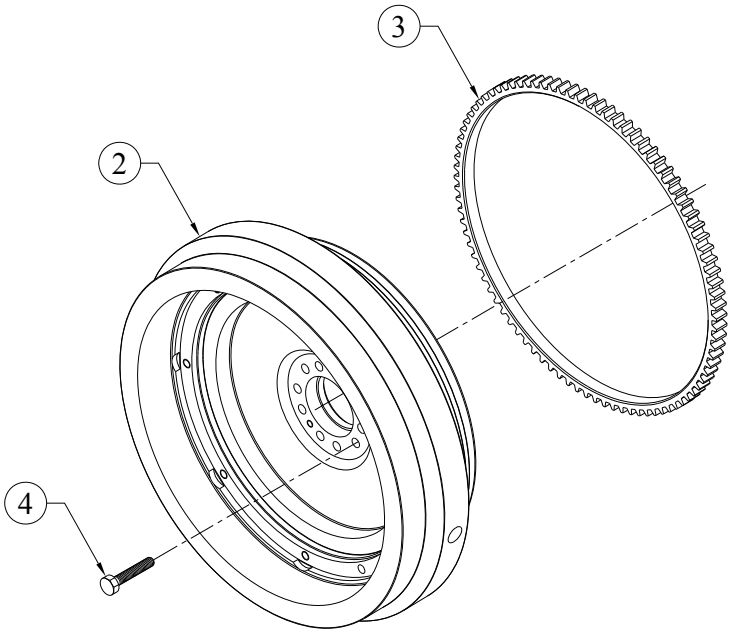

SR.NO.	PART NO.	DESCRIPTION	QTY.	REMARKS
*1	03.050.20.0.00	FLYWHEEL ASSEMBLY	1	CONSISTING OF SR. NO. 2 & 3
2	03.050.11.0.00	FLYWHEEL (MACHINING)	1	NOT SUPPLIED LOOSE
3	03.035.02.0.00	STARTER RING 121 TEETH, 3.175 MODULE	1	
4	04.024.02.0.00	BOLT FOR FLYWHEEL (M10X45 LONG)	10	

TITLE: FLYWHEEL HOUSING (SAE 2) FOR 3R1040 CC	**GROUP: -**3H.085

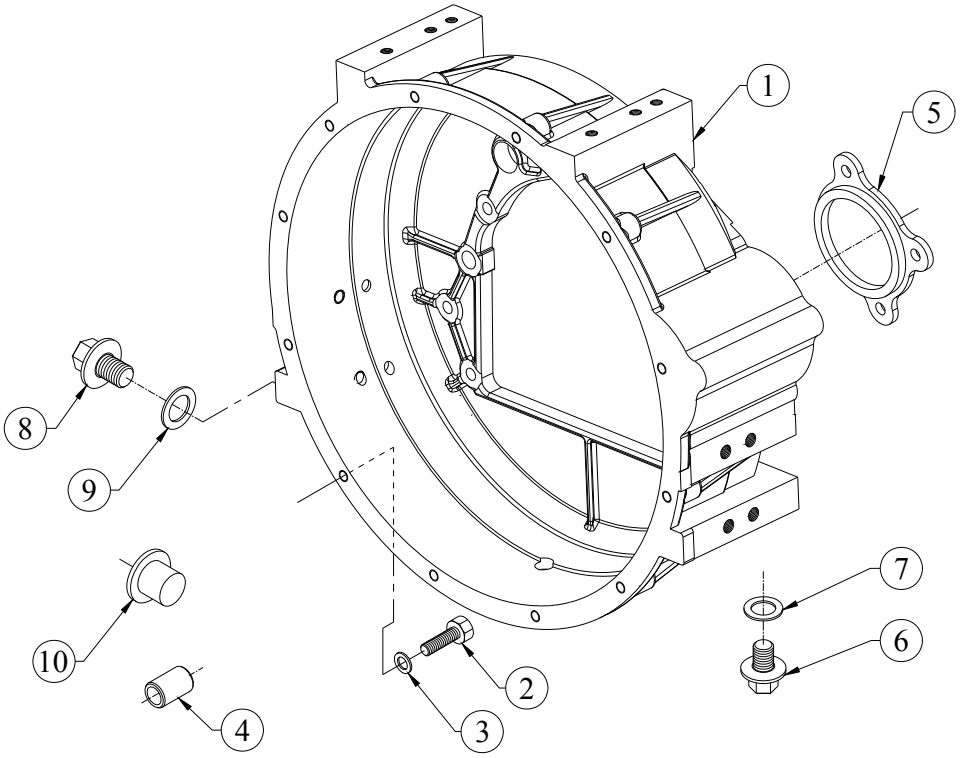

SR.NO.	PART NO.	DESCRIPTION	QTY.	REMARKS
1	3H.085.01.0.00	FLYWHEEL HOUSING SAE-2 144.5 WIDTH & S/F CLOSE COUPLED GENSET	1	
2	50.003.10.035.	SET SCREW - M10X1.5X35 - 8.8	8	
3	65.061.15.0.00	HARD WASHER	8	
4	4H.001.13.0.00	HOLLOW DOWEL (16 DIA)	2	
5	4H.038.02.0.00	FLANG FOR STARTER.	1	
6	50.602.16.000.	CORE PLUG 16X1.5	1	
7	50.508.15.000.	COPPER WASHER (17X23)	1	
8	50.602.18.000.	CORE PLUG	1	
9	50.508.17.000.	COPPER WASHER (18X24)	1	
10	4H.038.05.0.00	SHIPPING PLUG	1	

TITLE: - FUEL INJECTION PIPE (H.P PIPE 700MM)	**GROUP: -** P1.011

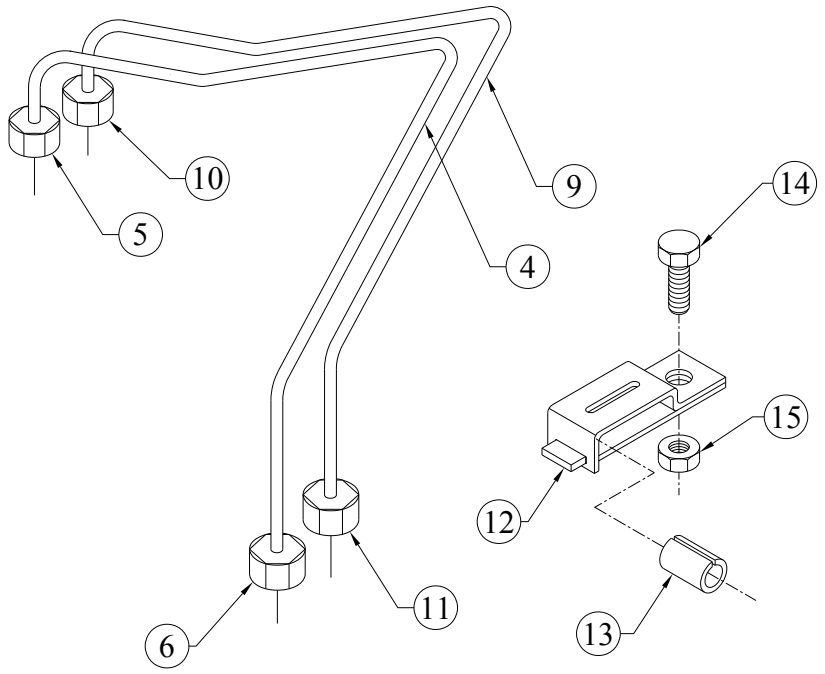

SR.NO.	PART NO.	DESCRIPTION	QTY.	REMARKS
*1	P1.011.10.0.00	H.P PIPE ASSLY. (WITH PIPE CLIP)	1	CONSISTING OF SR. NO. 2, 7 12 TO 15
*2	P1.011.20.0.00	H.P. PIPE FOR CYL. NO.1	1	CONSISTING OF SR. NO. 3 & 8
*3	4H.050.10.0.00	H.P.PIPE ASSLY.700 MM, STRAIGHT.	1	CONSISTING OF SR. NO. 4 TO 6
4	4H.050.01.0.00	H.P.PIPE,(6X1.8X700)	1	NOT SUPPLIED LOOSE
5	03.723.02.0.00	UNION NUT (M12X1.5)	1	NOT SUPPLIED LOOSE
6	03.723.03.0.00	UNION NUT (M14X1.5)	1	NOT SUPPLIED LOOSE
*7	P1.011.30.0.00	H.P PIPE CYL.NO 2	1	CONSISTING OF SR. NO. 8
*8	4H.050.10.0.00	H.P.PIPE ASSLY.700 MM, STRAIGHT.	1	CONSISTING OF SR. NO. 9 TO 11

TITLE: - FUEL INJECTION PIPE (H.P PIPE 700MM)	**GROUP: -** P1.011

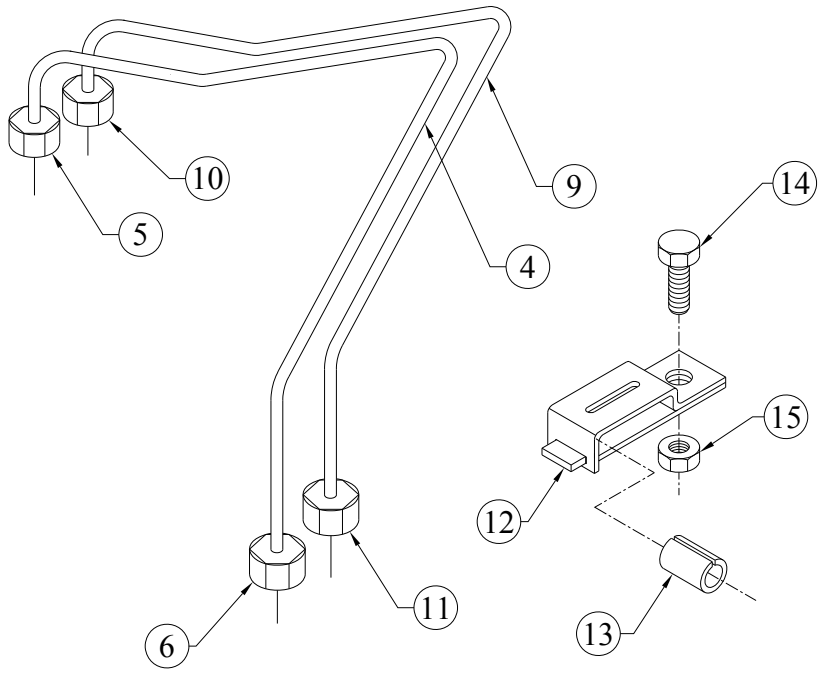

SR.NO.	PART NO.	DESCRIPTION	QTY.	REMARKS
9	4H.050.01.0.00	H.P.PIPE,(6X1.8X700)	1	NOT SUPPLIED LOOSE
10	03.723.02.0.00	UNION NUT (M12X1.5)	1	NOT SUPPLIED LOOSE
11	03.723.03.0.00	UNION NUT (M14X1.5)	1	NOT SUPPLIED LOOSE
12	50.541.01.000.	PIPE CLIP (FOR 2 PIPES)	1	
13	02.036.03.0.00	RUBBER SLEEVE	2	
14	50.003.06.012.	SET SCREW - M6X1X12 - 8.8	1	
15	50.006.06.000.	NUT - M6X1 - GR.8	1	

TITLE: -FUEL INJECTION PUMP (PG STAGE II)	**GROUP: -**3H.032.2

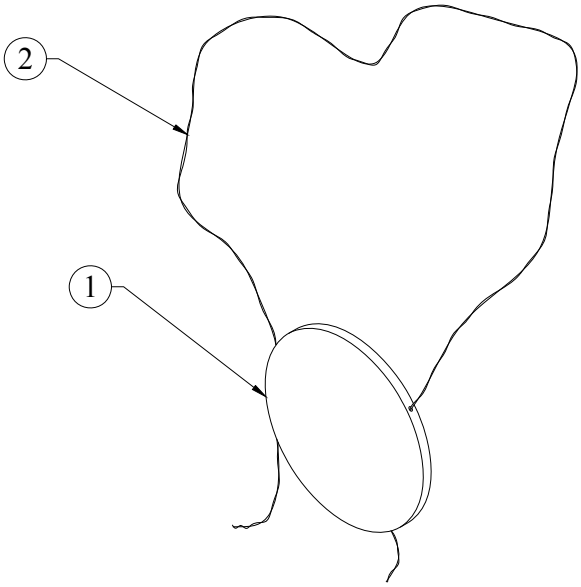

SR.NO.	PART NO.	DESCRIPTION	QTY.	REMARKS
1	10.027.02.0.00	LEAD SEAL (5945010300)	1	NOT SUPPLIED LOOSE
2	10.027.03.0.00	SEALING WIRE (5945010600)	1	NOT SUPPLIED LOOSE

TITLE: - FUEL PUMP 2R1040 4% GOV. P.G. (MICO NO. 9 440 030 029) F002 AOZ 390.	**GROUP: -** 2H.048

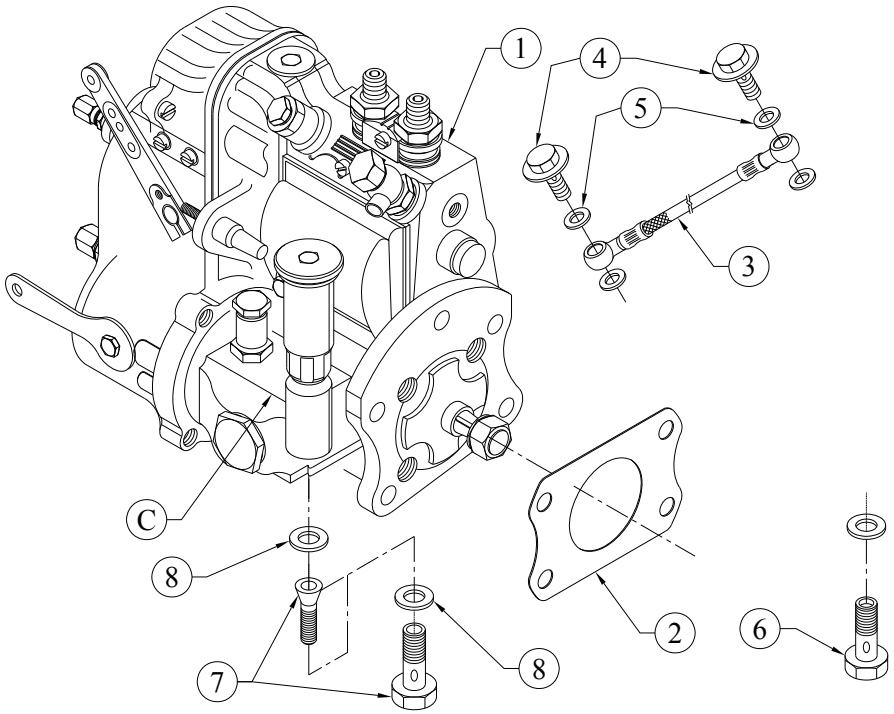

SR.NO.	PART NO.	DESCRIPTION	QTY.	REMARKS
1	2H.048.10.0.00	FUEL PUMP 4% GOVERNING (MICO NO. 9 440 030 029)F 002 A0Z 390	1	
2	34.016.12.0.00	JOINT FOR FUEL PUMP (NON ASBESTOS)	1	
3	48.417.01.0.00	LUB OIL SUPPLY HOSE (FOR FIP)	1	
4	03.660.07.0.00	SPECIAL BANJO BOLT(L.O.SUPPLY TO PUMP)	2	
5	50.508.07.00	COPPER WASHER (10X14)	4	
6	50.504.04.00	BANJO BOLT - M14X1.5	2	
7	34.016.15.0.0	BANJO BOLT WITH STRAINER (2 443 456 900)	1	
8	50.508.12.00	COPPER WASHER (14X20)	2	
A	2H.048.1	FUEL PUMP DETAIL PART LIST (FOR FIP No. 2H.048.10.0.00)	1	
B	2H.048.2	GOVERNOR DETAIL PART LIST (FOR FIP NO. 2H.048.10.0.00)	1	
C	2H.201.10.0.00	FEED PUMP (MICO NO. 9 440 030 029)	1	

TITLE: - FUEL PUMP	**GROUP: -**2H.048.1

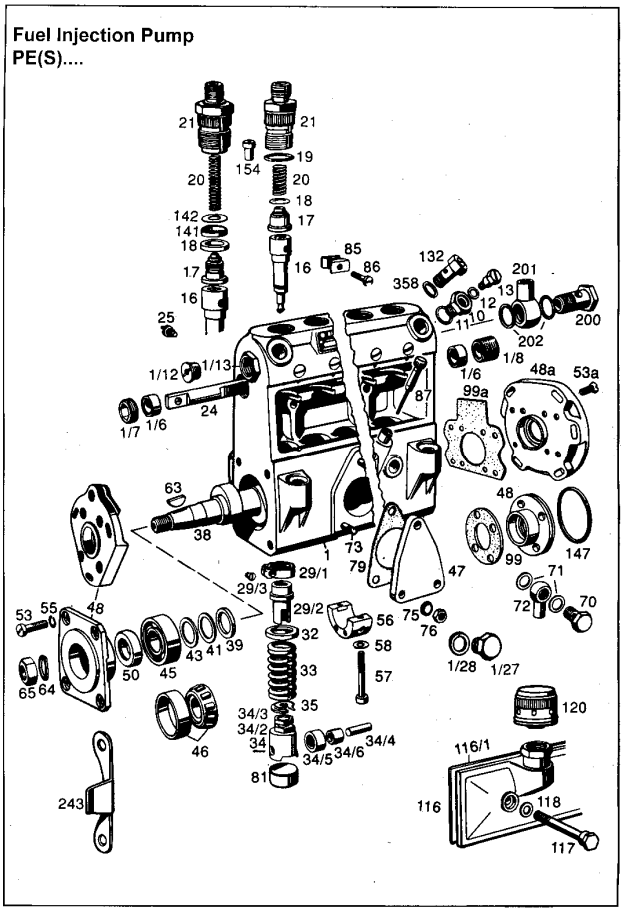

SR.NO.	KOEL PART NO.	DESCRIPTION	QTY.	MICO PART NO.
A	2H.048.1	Fuel Pump Detail Part List (For FIP No. 2H.048.10.0.00)	1	
1	2H.048.91.0.00	Pump housing	1	F 002 A10 572
16	2H.048.92.0.00	Pump element	2	F 002 B10 588
18	2H.191.22.0.00	Gasket	2	1 410 105 001
19	2H.191.30.0.00	O-ring	2	1 410 210 050
32	2H.191.24.0.00	Spring plate - upper	2	1 410 114 022
33	2H.192.82.0.00.	Compression spring	2	9 411 034 654
34	2H.192.88.0.00	Roller tappet assembly	2	9 411 038 711
35	2H.191.25.0.00	Spring plate - lower	2	1 410 120 071
38	2H.048.93.0.00	Camshaft	1	F 002 A11 163
39	2H.191.26.0.00	Stop ring Pump end 1 (Drive side)	1	1 410 202 034
39	2H.191.27.0.00	Stop ring Pump end 2 (Governor side)	1	1 410 202 042
41	2H.191.06.0.00	Shims for Camshaft Pump end 2 (Governor side) 0.12 mm thick	as reqd.	1 410 101 612
41	2H.191.14.0.00	Shims for Camshaft Pump end 1 (Drive side) 0.14 mm thick	as reqd.	1 410 102 627

TITLE: - FUEL PUMP	**GROUP: -**2H.048.1

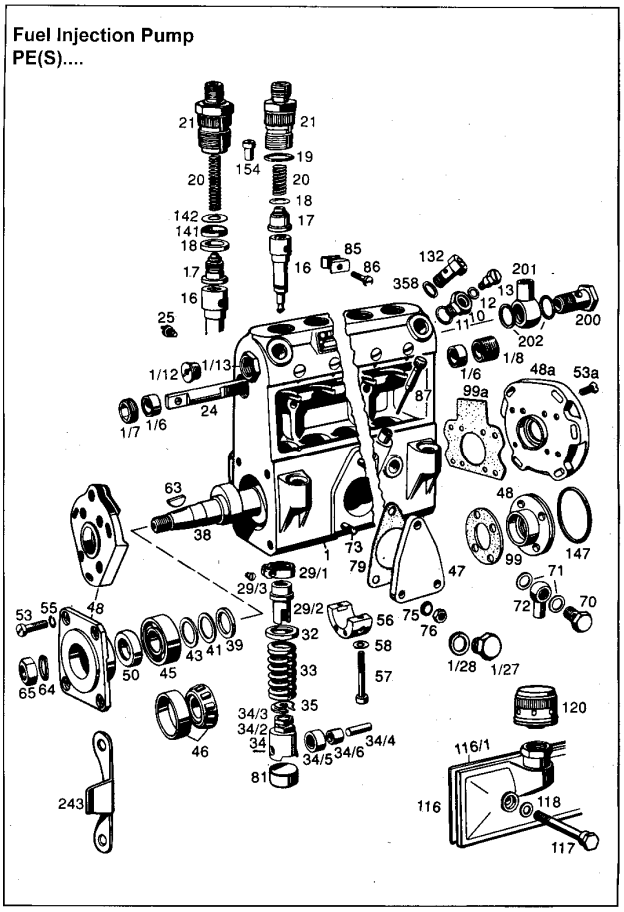

SR.NO.	KOEL PART NO.	DESCRIPTION	QTY.	MICO PART NO.
41	2H.191.08.0.00	Shims for Camshaft Pump end 2 (Governor side) 0.16 mm thick	as reqd.	1 410 101 616
41	2H.191.09.0.00	Shims for Camshaft Pump end 2 (Governor side) 0.18 mm thick	as reqd.	1 410 101 618
41	2H.191.10.0.00	Shims for Camshaft Pump end 2 (Governor side) 0.50 mm thick	as reqd.	1 410 101 620
41	2H.191.11.0.00	Shims for Camshaft Pump end 2 (Governor side) 1.00 mm thick	as reqd.	1 410 101 630
41	2H.191.02.0.00	Shims for Camshaft Pump end 2 (Governor side) 0.30 mm thick	as reqd.	1 230 101 608
41	2H.191.05.0.00	Shims for Camshaft Pump end 2 (Governor side) 0.10 mm thick	as reqd.	1 410 101 610
41	2H.191.18.0.00	Shims for Camshaft Pump end 1 (Drive side) 0.50 mm thick	as reqd.	1 410 102 631
41	2H.191.19.0.00	Shims for Camshaft Pump end 1 (Drive side) 1.00 mm thick	as reqd.	1 410 102 632
41	2H.191.13.0.00	Shims for Camshaft Pump end 1 (Drive side) 0.12 mm thick	as reqd.	1 410 102 626

TITLE: - FUEL PUMP	**GROUP: -**2H.048.1

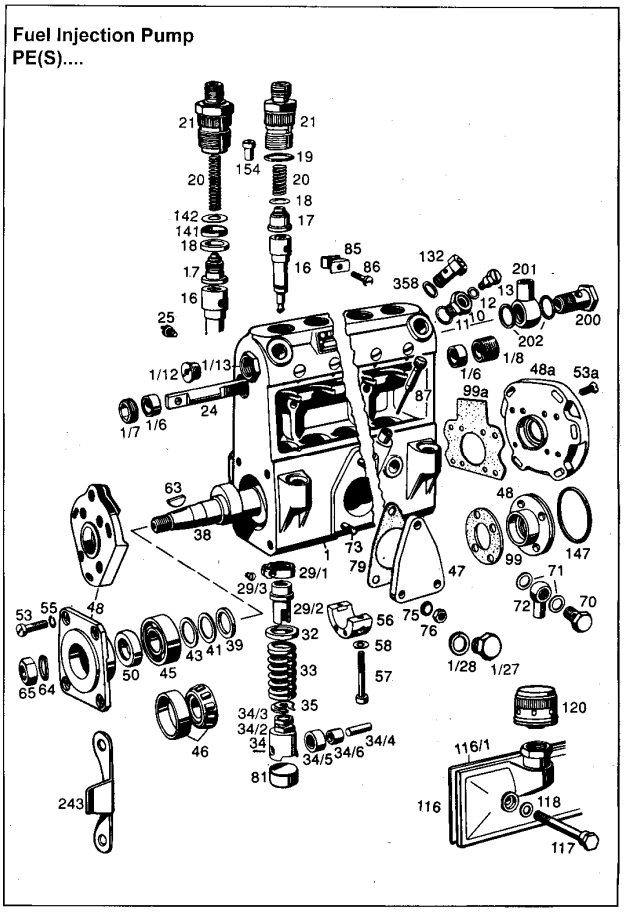

SR.NO.	KOEL PART NO.	DESCRIPTION	QTY.	MICO PART NO.
41	2H.191.16.0.00	Shims for Camshaft Pump end 1 (Drive side) 0.18 mm thick	as reqd.	1 410 102 629
41	2H.191.12.0.00	Shims for Camshaft Pump end 1 (Drive side) 0.10 mm thick	as reqd.	1 410 102 625
41	2H.191.17.0.00	Shims for Camshaft Pump end 1 (Drive side) 0.30 mm thick	as reqd.	1 410 102 630
41	2H.191.15.0.00	Shims for Camshaft Pump end 1 (Drive side) 0.16 mm thick	as reqd.	1 410 102 628
41	2H.191.07.0.00	Shims for Camshaft Pump end 2 (Governor side) 0.14 mm thick	as reqd.	1 410 101 614
46	2H.192.40.0.00	Tapered-roller bearing Pump end 1 (Drive side)	1	1 900 910 202
48	2H.192.84.0.00	Bearing flange	1	9 411 035 750
53	2H.192.48.0.00	Screw (for bearing flange)	4	2 910 011 240
55	2H.192.71.0.00	Spring washer (for bearing flange)	4	2 916 699 134
64	2H.048.71.0.00	Spring lock washer	1	F 002 A11 278
65	2H.192.79.0.00	Cap nut	1	9 411 033 319
73	2H.191.51.0.00	Threaded pin	3	1 413 502 000

TITLE: - FUEL PUMP	**GROUP: -**2H.048.1

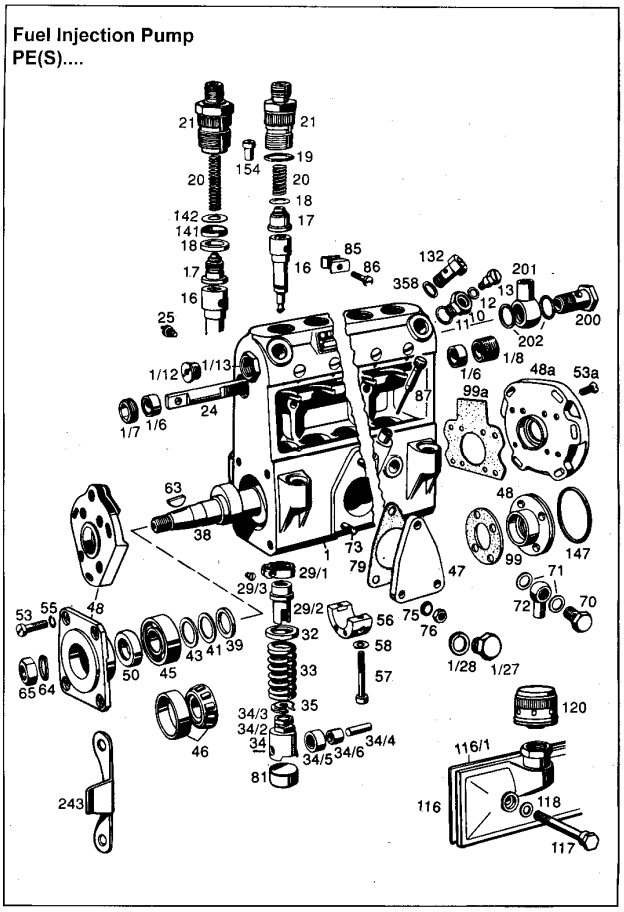

SR.NO.	KOEL PART NO.	DESCRIPTION	QTY.	MICO PART NO.
75	2H.048.87.0.00	Spring lock washer	3	2 916 690 005
76	2H.192.62.0.00	Hexagon nut	3	2 915 012 007
79	2H.048.69.0.00	Gasket	1	F 002 A11 261
81	2H.191.34.0.00	Base closing plug	2	1 410 551 036
86	2H.191.03.0.00	Clamping piece	1	1 410 023 009
99	2H.048.70.0.00	Gasket	1	F 002 A11 268
116	2H.191.54.0.00	Closing cover	1	1 415 622 105
117	2H.191.48.0.00	Screw to fix 117	2	1 413 414 009
118	2H.191.29.0.00	O-ring	1	1 410 210 037
132	2H.048.56.0.00	Overflow valve	1	F 002 A10 627
154	2H.191.32.0.00	Filler piece	2	1 410 326 005
358	2H.192.76.0.00	Flat seal ring	2	2 916 710 610
1/12	2H.192.16.0.00	Closing plug (Governor side)	1	1 423 463 040
1/13	2H.048.83.0.00	Fitting	1	1 413 463 010
1/6	2H.191.28.0.00	Guide bush	2	1 410 202 086
1/7	2H.191.44.0.00	Threaded ring	1	1 413 344 001
1/8	2H.191.33.0.00	Threaded bushing	1	1 410 361 001

TITLE: - FUEL PUMP	**GROUP: -**2H.048.1

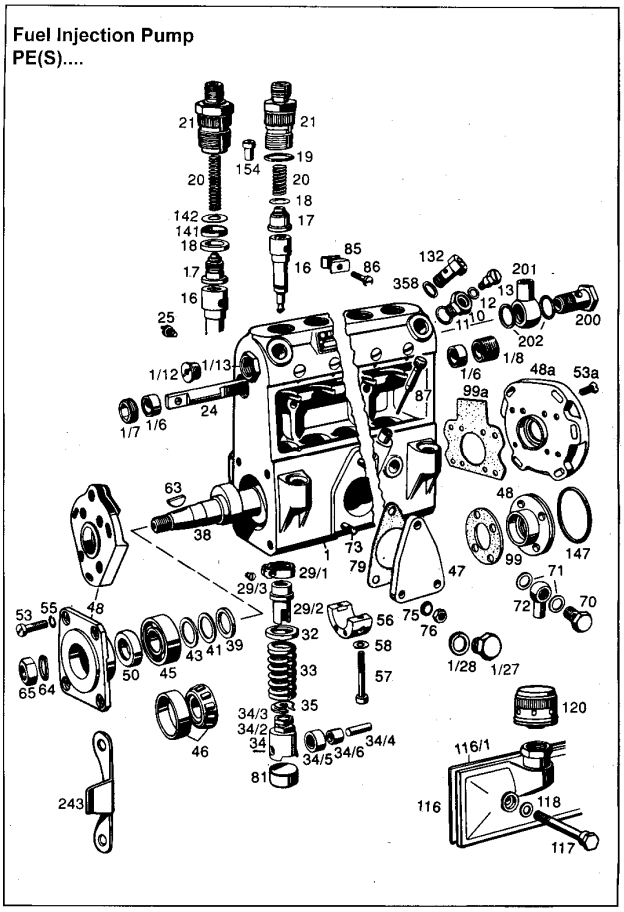

SR.NO.	KOEL PART NO.	DESCRIPTION	QTY.	MICO PART NO.
116/1	2H.191.36.0.00	Gasket	1	1 411 015 102
17	2H.192.93.0.00	Delivery valve assembly	2	9 412 038 579
29/1	2H.191.61.0.00	Gear segment Normal size	as reqd	1 416 336 061
29/1	2H.191.60.0.00	Gear segment Over size	as reqd	1 416 336 060
29/2	2H.048.67.0.00	Regulating sleeve	2	F 002 A11 258
29/3	2H.048.65.0.00	Clamping screw	2	F 002 A11 236
34/2	2H.191.41.0.00	Lock nut	2	1 413 300 028
34/3	2H.191.50.0.00	Adjusting screw	2	1 413 450 010
34/4	2H.192.89.0.00	Roller pin	2	9 412 033 145
34/5	2H.191.42.0.00	Roller	2	1 413 300 248
46	2H.192.39.0.00	Tapered-roller bearing Pump end 2 (Governor side)	1	1 900 910 201
63	2H.192.31.0.00	Woodruff key	1	1 460 023 307
85	2H.191.03.0.00	Clamping piece	1	1 410 023 009

TITLE: - GOVERNOR	**GROUP: -**2H.048.2

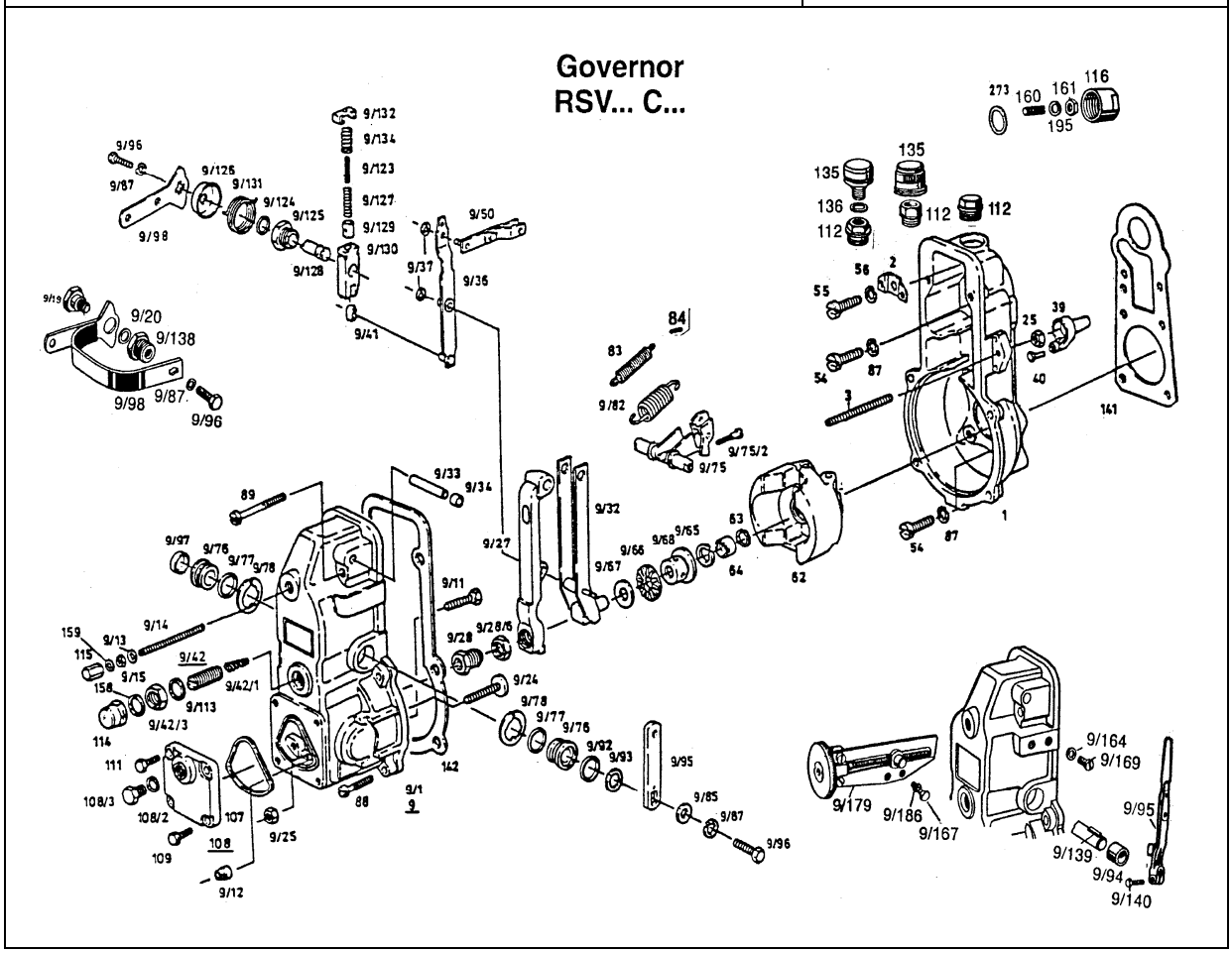

SR.NO.	KOEL PART NO.	DESCRIPTION	QTY.	MICO PART NO.
9/15	2H.191.99.0.00	Hexagon nut	1	1 423 300 058
9/19	2H.048.86.0.00	Hexagon screw	1	1 423 462 020
9/20	2H.192.73.0.00	Flat seal ring	1	2 916 710 603
9/24	2H.192.10.0.00	Full load stop screw	1	1 423 410 011
9/25	2H.192.62.0.00	Hexagon nut for 9/25	1	2 915 012 007
9/27	2H.191.93.0.00	Tensioning lever	1	1 422 031 021
9/32	2H.191.90.0.00	Guide lever		1 421 933 037
9/33	2H.191.95.0.00	Lever shaft	1	1 423 000 005
9/34	2H.191.75.0.00	Closure cap	2	1 420 505 040
9/36	2H.191.88.0.00	Fulcrum lever	2	1 421 901 178
9/37	2H.192.65.0.00	Circlip for 9/36 & 9/50	2	2 916 080 907
9/41	2H.191.98.0.00	Sliding piece	1	1 423 200 020
9/42	2H.192.09.0.00	Supplementary idling spring assembly	1	1 423 401 018
9/42/1	2H.192.21.0.00	Compression spring	1	1 424 641 001
9/42/3	2H.048.84.0.00	Hexagon nut	1	1 423 300 020
9/50	2H.192.97.0.00	Shackle	1	9 421 031 905
9/65	2H.192.66.0.00	Retainer	1	2 916 600 006

TITLE: - GOVERNOR	**GROUP: -**2H.048.2

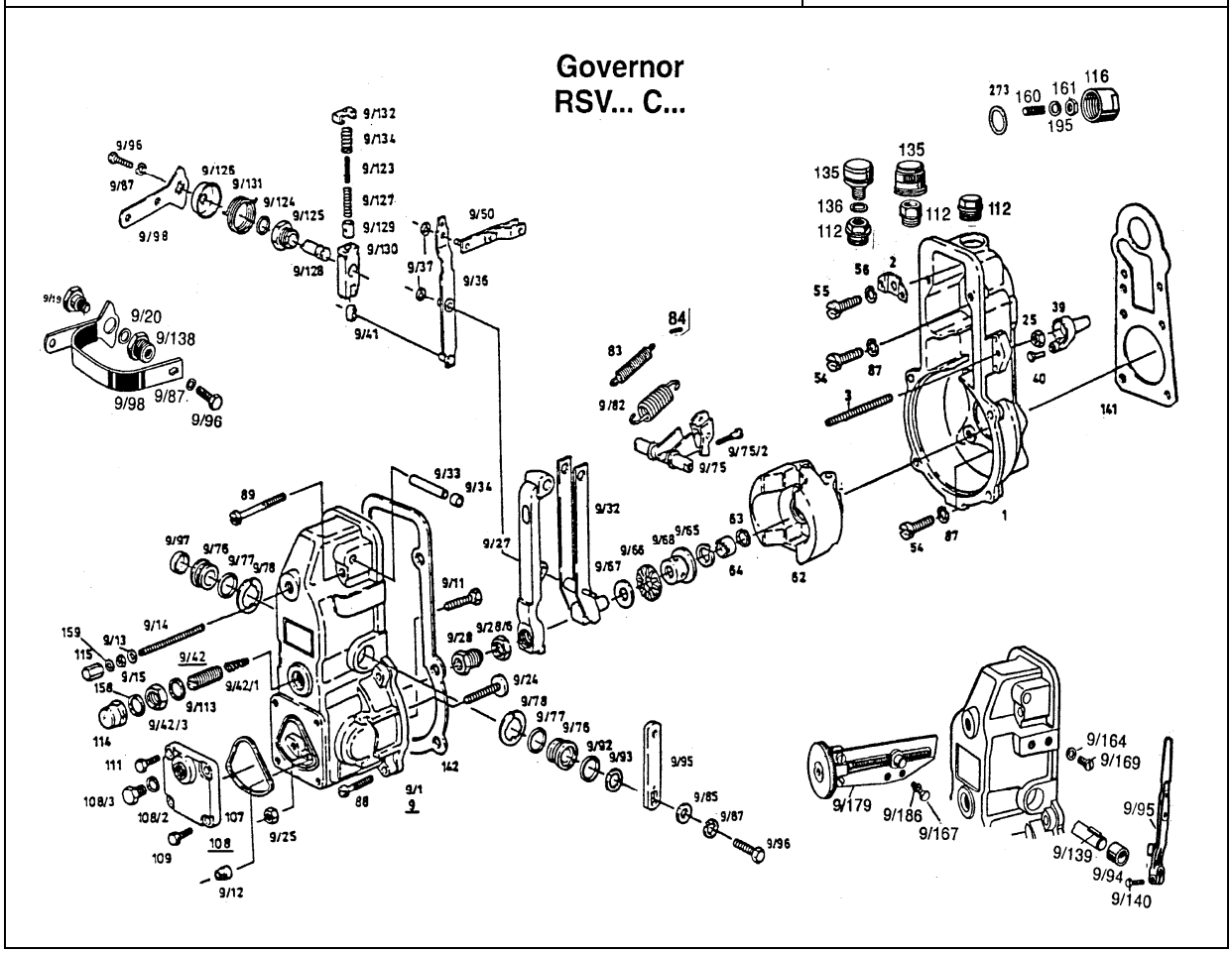

SR.NO.	KOEL PART NO.	DESCRIPTION	QTY.	MICO PART NO.
9/66	2H.048.77.0.00	Needle-roller bearing	1	F 002 A20 864
9/67	2H.191.64.0.00	Supporting disc	1	1 420 101 078
9/68	2H.192.94.0.00	Sliding sleeve	1	9 421 030 333
9/75	2H.191.92.0.00	Swivelling lever	1	1 422 013 039
9/75/2	2H.192.11.0.00	Adjusting screw	1	1 423 414 037
9/76	2H.191.72.0.00	Bearing bush	2	1 420 328 034
9/77	2H.192.38.0.00	O-ring	2	1 900 210 013
9/78	2H.192.64.0.00	Locking washer	2	2 916 080 015
9/82	2H.192.22.0.00	Governor spring	1	1 424 650 007
9/87	2H.192.70.0.00	Spring washer	1	2 916 699 132
9/92	2H.191.69.0.00	O-ring	1	1 420 210 010
9/93	2H.191.63.0.00	Shim 1.00 mm thick	as reqd.	1 420 101 030
9/93	2H.191.65.0.00	Shim 0.50 mm thick	as reqd.	1 420 101 634
9/94	2H.191.71.0.00	Bush	1	1 420 300 073
9/95	2H.191.91.0.00	Control lever	2	1 422 003 026
9/96	2H.192.50.0.00	Hexagon screw	1	2 911 062 196

TITLE:- GOVERNOR	**GROUP:-**2H.048.2

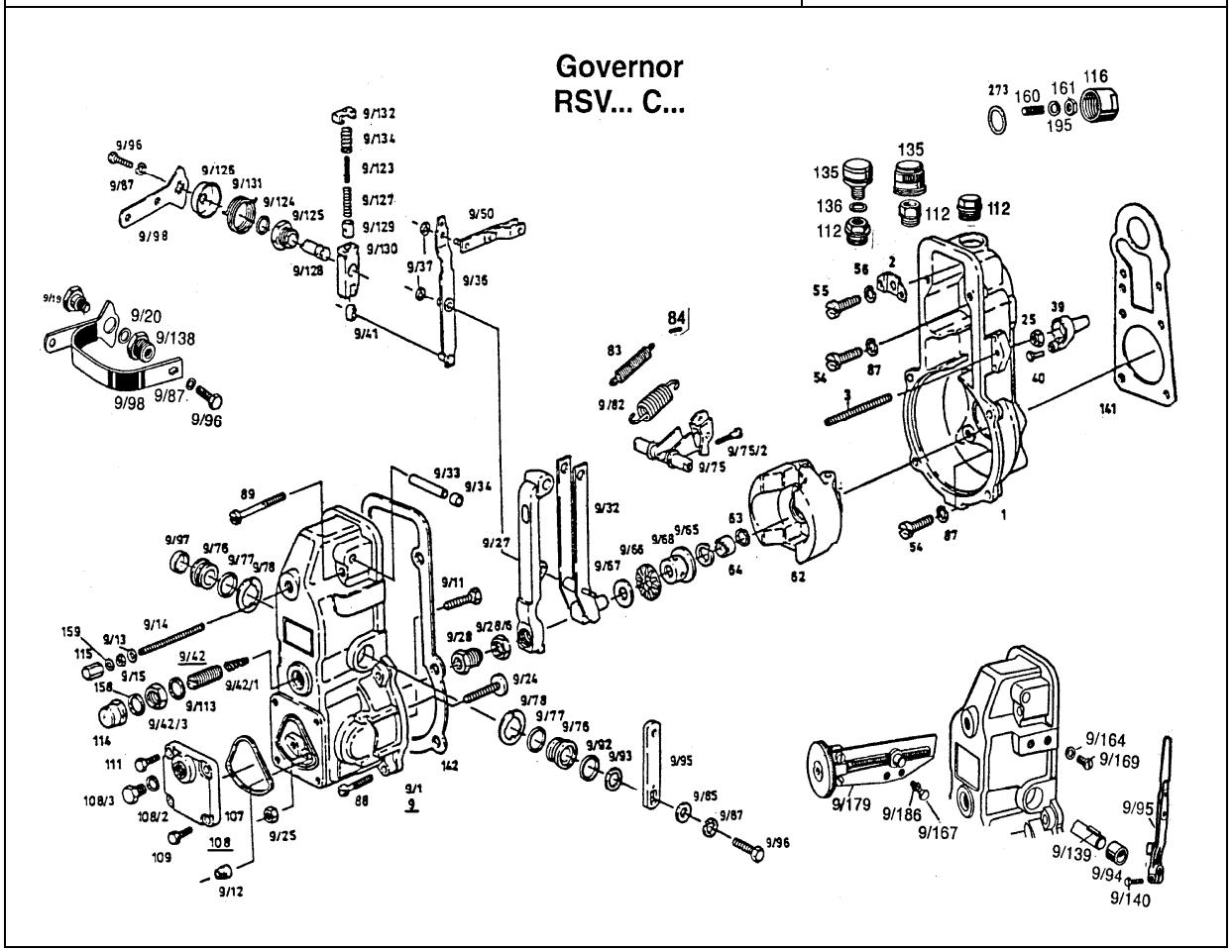

SR.NO.	KOEL PART NO.	DESCRIPTION	QTY.	MICO PART NO.
9/97	2H.191.73.0.00	Capsule	1	1 420 500 005
9/98	2H.191.89.0.00	Stop lever	1	1 421 910 012
1	2H.192.26.0.00	Governor housing	1	1 425 121 056
2	2H.191.87.0.00	Strap	1	1 421 323 000
3	2H.192.05.0.00	Max. Speed stop screw	1	1 423 400 025
9	2H.048.74.0.00	Governor cover	1	F 002 A20 542
25	2H.192.62.0.00	Hexagonal nut	1	2 915 012 007
39	2H.191.80.0.00	Protective cap	1	1 420 524 000
54	2H.192.59.0.00	Screw	6	2 912 742 199
55	2H.192.61.0.00	Screw	1	2 914 552 179
56	2H.192.71.0.00	Spring washer for 55	1	2 916 699 134
62	2H.192.30.0.00	Flyweight assembly	1	1 428 194 041
63	2H.191.66.0.00	Spring washer	1	1 420 151 001
64	2H.192.03.0.00	Round nut	1	1 423 341 034
83	2H.192.24.0.00	Starting spring	1	1 424 650 056
87	2H.048.87.0.00	Spring washer for 54	6	2 916 690 005
88	2H.192.57.0.00	Screw - lower	4	2 912 732 203

TITLE:- GOVERNOR	**GROUP:-**2H.048.2

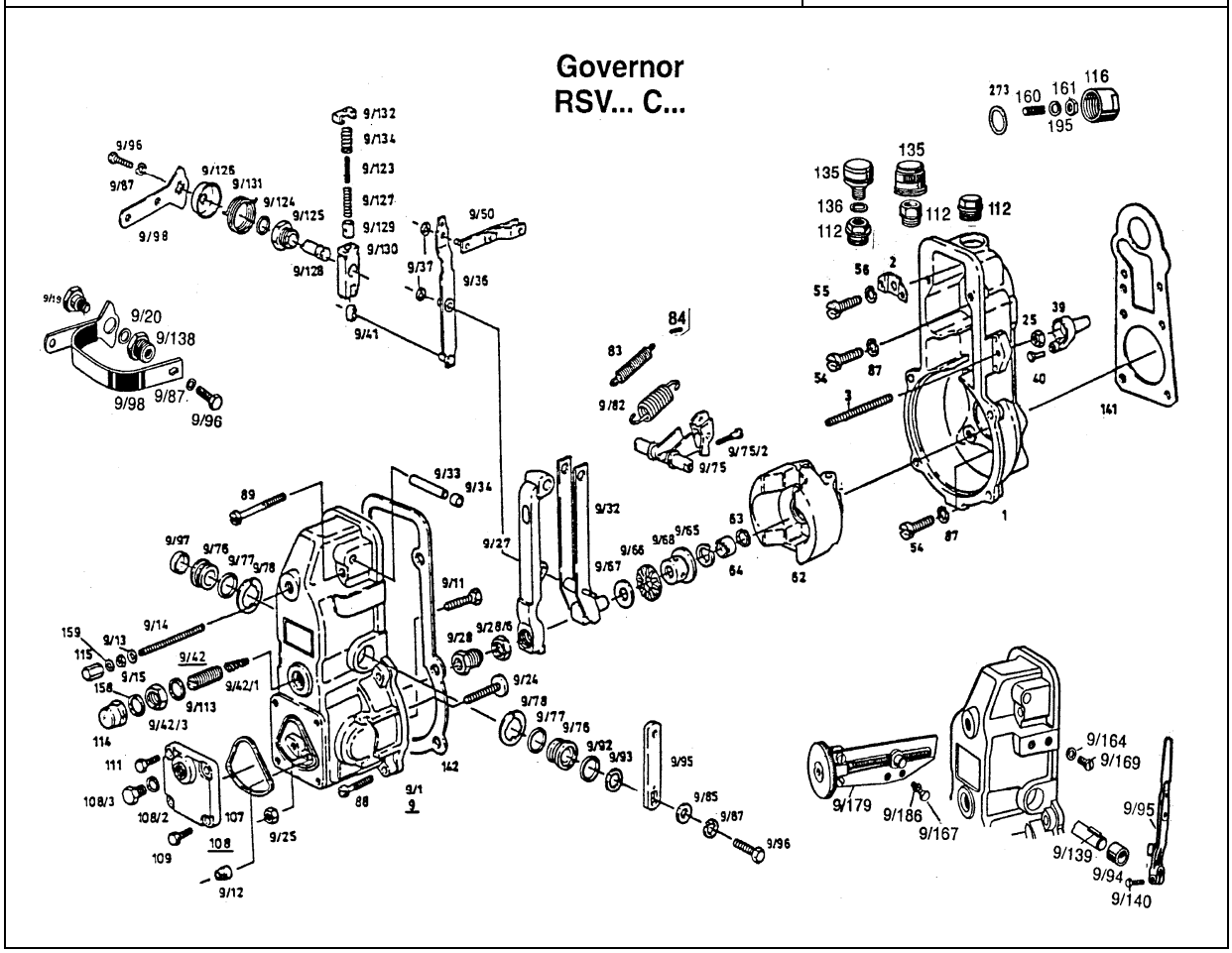

SR.NO.	KOEL PART NO.	DESCRIPTION	QTY.	MICO PART NO.
89	2H.192.58.0.00	Screw - upper	2	2 912 732 209
107	2H.191.67.0.00	Sealing ring	1	1 420 206 016
108	2H.191.85.0.00	Closing cover	1	1 421 038 013
109	2H.192.53.0.00	Hexagon screw	2	2 911 182 193
111	2H.192.49.0.00	Hexagon screw	2	2 911 062 193
112	2H.192.15.0.00	Screw plug	1	1 423 462 099
114	2H.192.02.0.00	Cap nut	1	1 423 317 044
116	2H.192.95.0.00	Control rack stop	1	9 421 030 525
158	2H.192.33.0.00	Sealing ring	1	1 460 105 309
159	2H.192.72.0.00	Sealing ring	1	2 916 710 602
273	2H.191.70.0.00	Gasket	1	1 420 211 005
9/138	2H.192.14.0.00	Inlet union screw	1	1 423 455 020
9/28	2H.191.77.0.00	Adaption capsule	1	1 420 506 695
9/28/6	2H.192.34.0.00	Hexagon nut	1	1 463 300 302
9/9	2H.192.28.0.00	Governor cover alone	1	1 425 627 053
141	2H.048.89.0.00	Gasket	1	F 002 A21 395
142	2H.048.90.0.00	Gasket	1	F 002 A21 498

TITLE:- FEED PUMP	**GROUP:-**2H.048

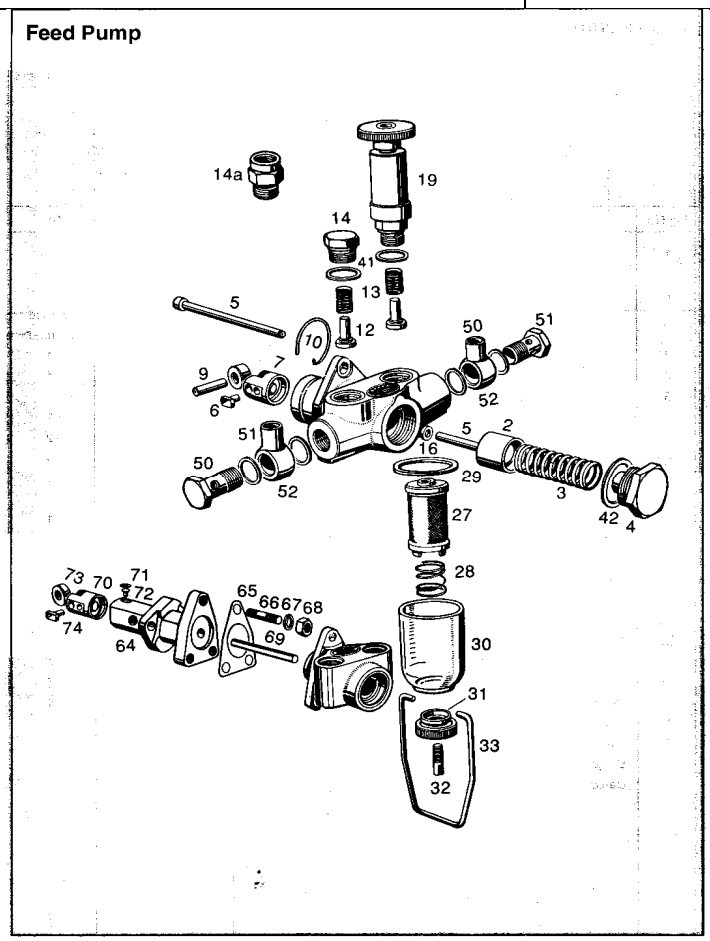

SR.NO.	KOEL PART NO.	DESCRIPTION	QTY.	MICO PART NO.
C	2H.201.10.0.00	Feed Pump (Mico No. 9 440 030 029)	1	
1	2H.201.11.0.00	Housing	**	not supplied as spare parts
2	2H.201.12.0.00	Feed Pump Plunger - Blue	1	2 449 998 709
2	2H.201.13.0.00	Feed Pump Plunger - White	1	2 449 998 713
3	2H.201.14.0.00	Plunger Spring	1	2 444 617 010
4	2H.201.15.0.00	Closing Plug	1	9 441 033 404
5	2H.201.16.0.00	Pressure Spindle	1	2 443 120 022
12	2H.201.17.0.00	Valve	2	2 443 203 001
13	2H.201.18.0.00	Spring	2	2 444 615 006
16	2H.201.19.0.00	O' ring in Housing	1	2 440 210 009
19	2H.201.20.0.00	Hand Primer	1	F 002 A50 013
27	2H.201.21.0.00	Prefilter Sleve	1	1 450 410 011
28	2H.201.22.0.00	Spring	1	2 454 642 001
29	2H.201.23.0.01	Sealing Washer	1	2 440 109 005
30	2H.201.24.0.00	Prefilter Housing	1	9 451 030 528
31	2H.201.25.0.00	Clamping Nut	1	2 453 345 000

TITLE:- FEED PUMP	**GROUP:-**2H.048

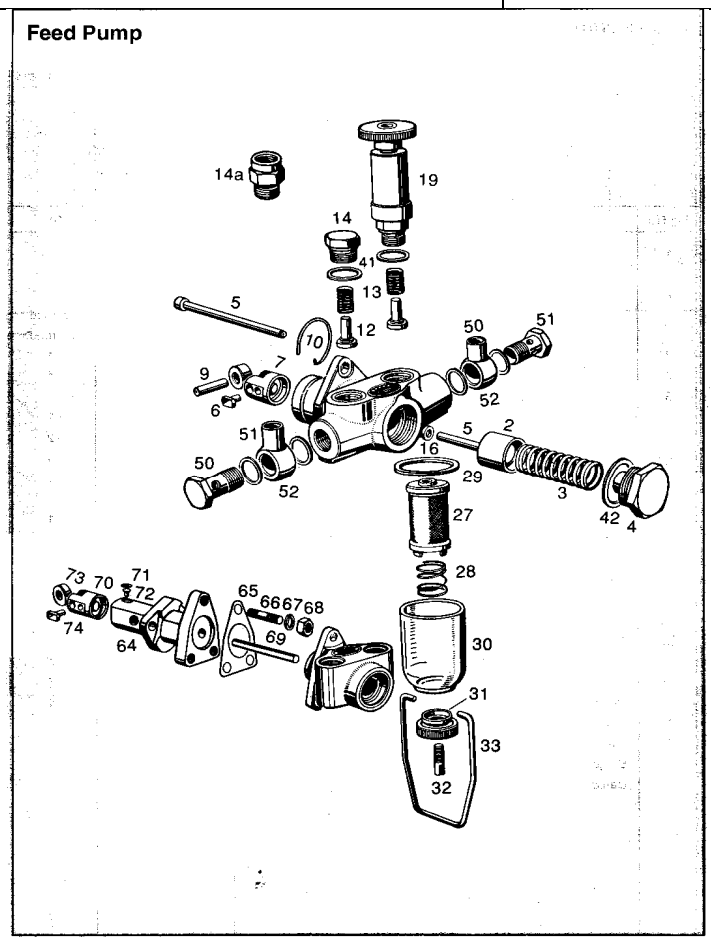

SR.NO.	KOEL PART NO.	DESCRIPTION	QTY.	MICO PART NO.
32	2H.201.26.0.00	Stud	1	2 453 405 001
33	2H.201.27.0.00	Clip	1	2 459 999 000
41	2H.201.28.0.00	Sealing ring for 14a & 19	2	1 230 203 001
42	2H.201.29.0.00	Sealing ring for 4	1	2 440 105 000
*	2H.201.30.0.00	Prefilter	1	***
*	2H.201.31.0.00	Pipe connection	1	***
*	2H.201.32.0.00	Flat Seal Ring	****	***
*	2H.201.33.0.00	Banjo Bolt	****	9 411 033 404
*	2H.201.34.0.00	Banjo	****	1 903 385 009
*	2H.201.35.0.00	Flat Seal Ring	****	2 916 710 609
14a	2H.201.36.0.00	Reducing Nipple	1	2 443 355 000

TITLE: - FUEL PUMP GEAR	**GROUP: -** 2H.011

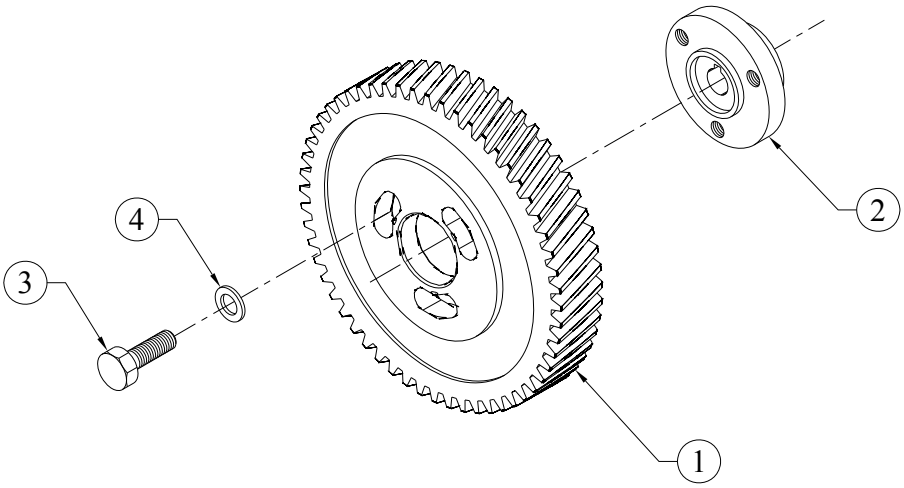

SR.NO.	PART NO.	DESCRIPTION	QTY.	REMARKS
1	2H.011.01.0.00	FUEL PUMP GEAR(FINISH)	1	
2	2H.011.02.0.00	HUB FOR FUEL PUMP GEAR(FINISH)	1	
3	50.003.08.025.	SET SCREW - M8X1.25X25 - 8.8	3	
4	34.017.05.0.00	WASHER FOR FUEL PUMP GEAR.	3	

TITLE: - GEAR CASING (MACHINING)	**GROUP: -** 3H.962

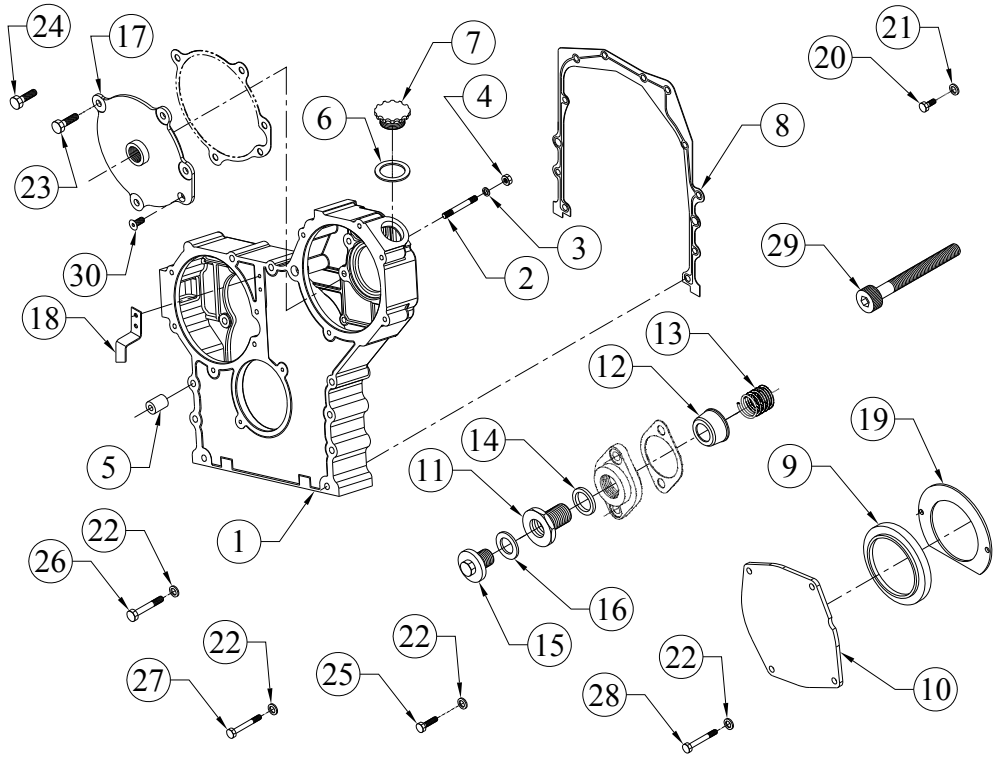

SR.NO.	PART NO.	DESCRIPTION	QTY.	REMARKS
1	3H.962.01.0.00	GEAR CASINING (MACHINING)	1	
2	03.001.12.0.00	PRECOATED STUD (FOR FUEL PUMP MOUNTING)	4	
3	50.506.10.000.	PLAIN MACHINED WASHER - M10	4	
4	50.006.10.000.	NUT - M10X1.5 - GR.8	4	
5	34.001.23.0.00	DOWEL FOR GEAR CASING	2	
6	F6.040.01.0.00	SEALING WASHER (FOR OIL FILLING CAP)	1	
7	F6.040.04.0.00	OIL FILLER CAP	1	
8	4H.1235.13.0.00	JOINT FOR GEAR CASING	1	
9	4H.358.06.0.00	GEAR END OIL SEAL (80X105X12)	1	
10	4H.1190.02.0.00	COVER FOR FUEL PUMP GEAR	1	
11	03.117.04.0.00	ADAPTOR (FOR TACHODRIVE)	1	NOT SUPPLIED LOOSE
12	03.014.07.0.00	CUP FOR SPRING	1	NOT SUPPLIED LOOSE
13	03.014.06.0.00	SPRING FOR CUP	1	NOT SUPPLIED LOOSE

TITLE: - GEAR CASING (MACHINING)	**GROUP: -** 3H.962

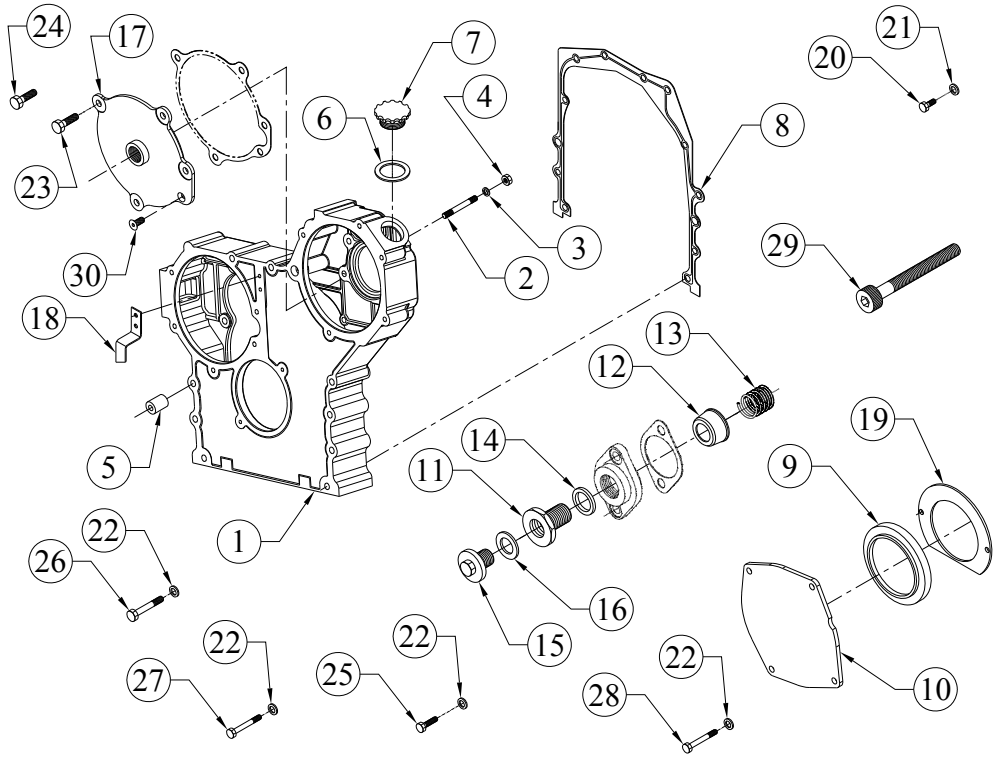

SR.NO.	PART NO.	DESCRIPTION	QTY.	REMARKS
14	50.508.27.000.	COPPER WASHER (24X29)	1	NOT SUPPLIED LOOSE
15	34.001.36.0.00	PRECOATED CORE PLUG (FOR MAIN OIL GALLERY FWE SIDE)	1	
16	50.508.17.000.	COPPER WASHER (18X24)	1	
17	4H.1235.02.0.00	COVER FOR CAM SHAFT BORE ON GEAR CASING	1	
18	4H.1235.07.0.00	TIMING POINTER PG	1	
19	4H.358.12.0.00	OIL DEFLECTOR PLATE	1	
20	50.003.06.010.	SET SCREW - M6X1X10 - 8.8	4	
21	50.506.06.000.	PLAIN MACHINED WASHER - M6	4	
22	50.506.08.000.	PLAIN MACHINED WASHER - M8	18	
23	50.003.08.020.	SET SCREW - M8X1.25X20 - 8.8	2	
24	50.003.08.016.	SET SCREW - M8X1.25X16 - 8.8	3	
25	50.003.08.025.	SET SCREW - M8X1.25X25 - 8.8	3	
26	50.002.08.080.	SET BOLT - M8X1.25X80 - 8.8	4	
27	50.002.08.085.	SET BOLT - M8X1.25X85 - 8.8	3	
28	50.002.08.110.	SET BOLT - M8X1.25X110 - 8.8	2	

TITLE: - GEAR CASING (MACHINING)	**GROUP: -** 3H.962

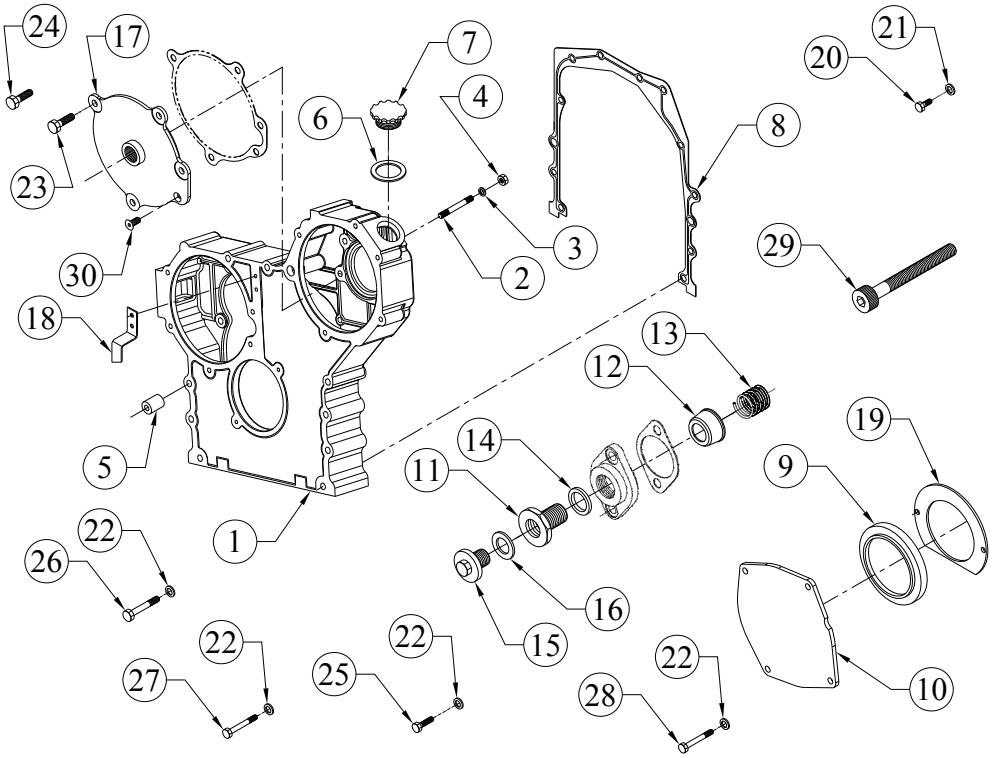

SR.NO.	PART NO.	DESCRIPTION	QTY.	REMARKS
29	50.011.08.075.	SOCKET HEAD SCREW - M8X1.25X75 - 8.8	1	
30	06.010.01.0.00	COUNTER SUNK SOCKET HEAD SCREW.	1	

TITLE: - HOSES FOR 3H.415.10.0.00 AIR CLENAER ASSEMBLY (RB22/RB33)	**GROUP: -** 47.415.4

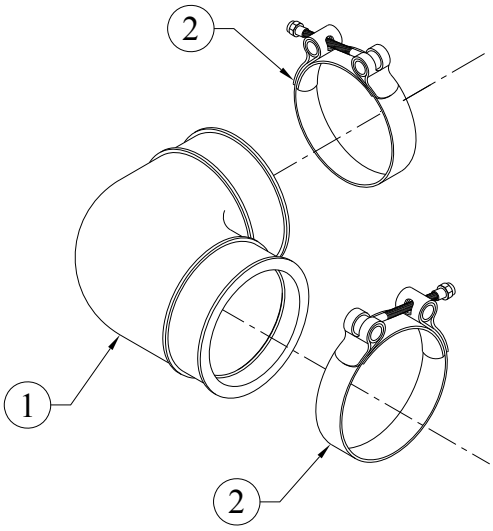

SR.NO.	PART NO.	DESCRIPTION	QTY.	REMARKS
1	4H.404.02.0.00	RUBBER HOSE	1	
2	F6.377.16.0.00	JUPITER T -BOLT CLAMP S/F 83MM O.D	2	

TITLE: - INJECTOR FOR CPCB (5X0.19 P TYPE)	**GROUP: -** 3H.148

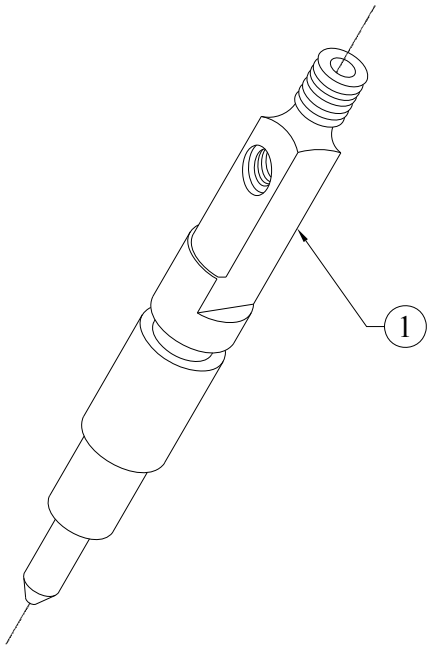

SR.NO.	PART NO.	DESCRIPTION	QTY.	REMARKS
1	3H.148.01.0.00	INJECTOR (MICO PART NO. B433379809072)	1	

TITLE: - INLET MANIFOLD (FWE OPEN)	**GROUP: -** 2H.056

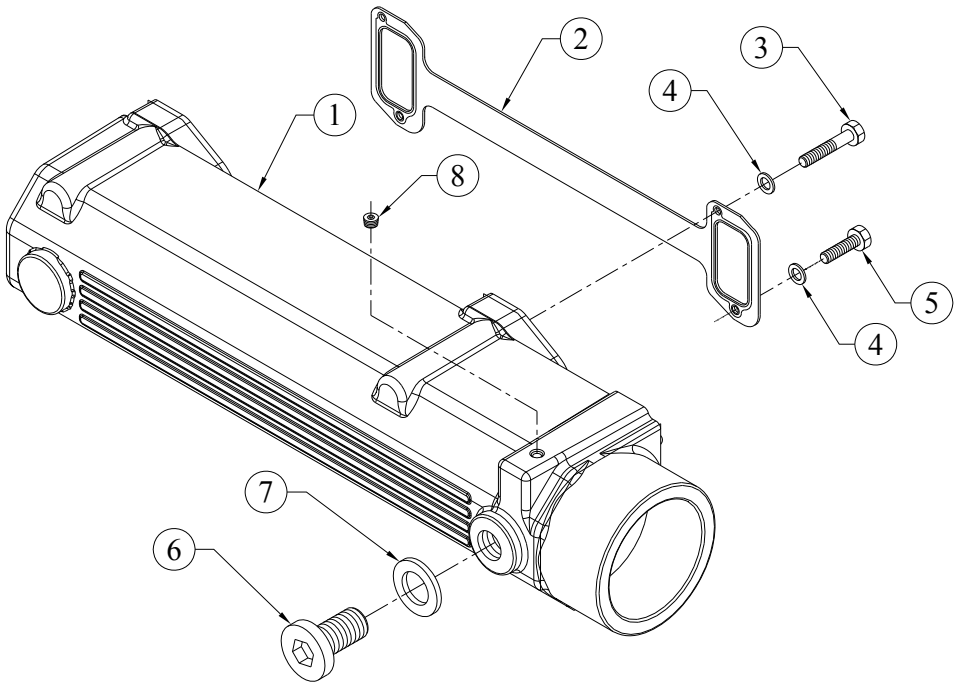

SR.NO.	PART NO.	DESCRIPTION	QTY.	REMARKS
1	2H.094.01.0.00	AIR INLET MANIFOLD (ALUMINUM)FOR SHANTI	1	
2	4H.030.06.0.00	METTALIC JOINT FOR INLET MANIFOLD	1	
3	50.002.08.090.	SET BOLT - M8X1.25X90 - 8.8	2	
4	50.506.08.000.	PLAIN MACHINED WASHER - M8	4	
5	50.003.08.030.	SET SCREW - M8X1.25X30 - 8.8	2	
6	04.001.08.0.00	PRECOATED SCREW PLUG	1	
7	50.508.18.000.	COPPER WASHER (20X24)	1	
8	50.056.02.000.	HEADLESS PIPE PLUG 1/8"-27 NPTF	1	

TITLE: -INTERMEDIATE GEAR AND SUPPORT FOR COMBINED GEAR CASING	**GROUP: -** 4H.237.1

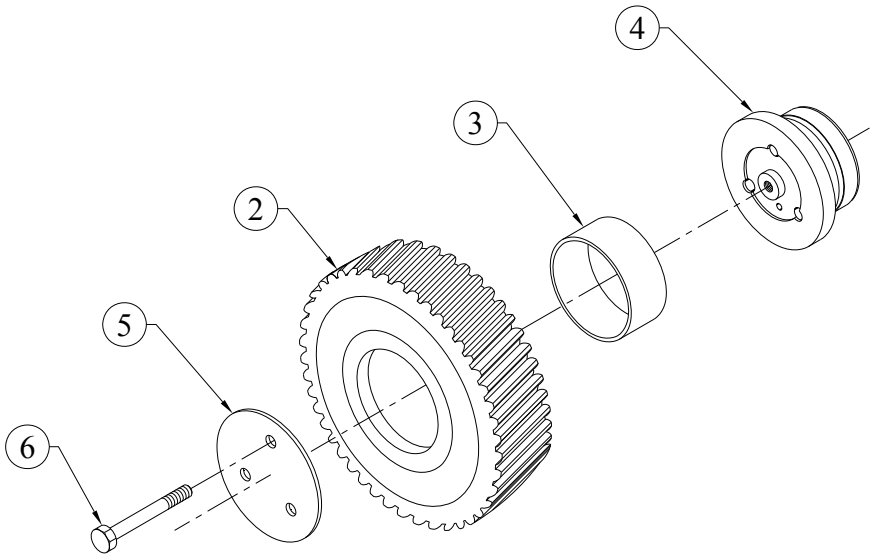

SR.NO.	PART NO.	DESCRIPTION	QTY.	REMARKS
*1	2H.038.10.0.00	ASSLY OF INTERMEDIATE GEAR & BUSH	1	CONSISTING OF SR. NO. 2, 3
2	2H.038.03.0.00	INTERMEDIATE GEAR (FINISH)	1	NOT SUPPLIED LOOSE
3	2H.004.02.9.00	BUSH FOR INTERMEDIATE GEAR(S/F)	1	NOT SUPPLIED LOOSE
4	2H.004.11.0.00	SUPPORT FOR INTERMEDIATE GEAR	1	
5	2H.004.04.0.00	RETAINING PLATE (FOR INT.GEAR)	1	
6	50.002.08.070.	SET BOLT - M8X1.25X70 - 8.8	3	

TITLE: - KIT GROUP FOR CC GENSET. (FASTNERS.) FOR P1 SERIES ALT.	**GROUP: -** 02.511.6

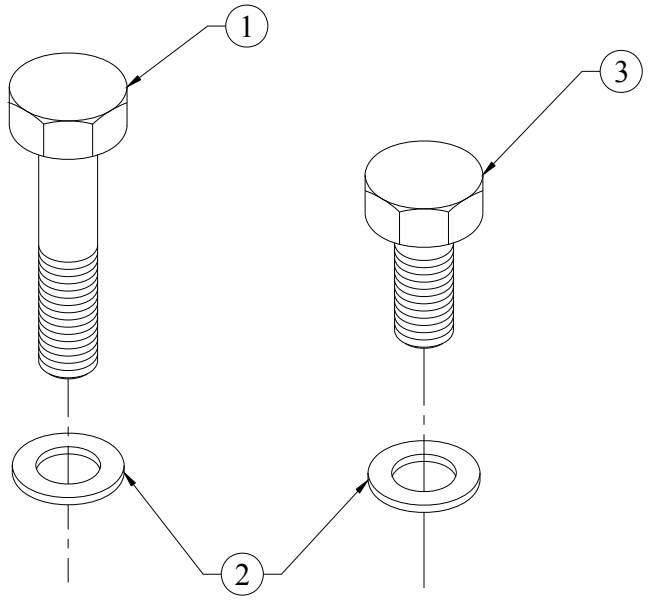

SR.NO.	PART NO.	DESCRIPTION	QTY.	REMARKS
1	50.002.10.060.	SET BOLT - M10X1.5X60 - 8.8	12	
2	02.438.23.0.00	HARD WASHER (11 I.D. X 19 O.D. X 1.5 TH)	20	
3	50.003.10.020.	SET SCREW - M10X1.5X20 - 8.8	8	

TITLE: - KIT ITEMS OF SPARES (WITH SPIN ON FUEL FILTER & POLY V BELT)	**GROUP: -** 3H.350.3

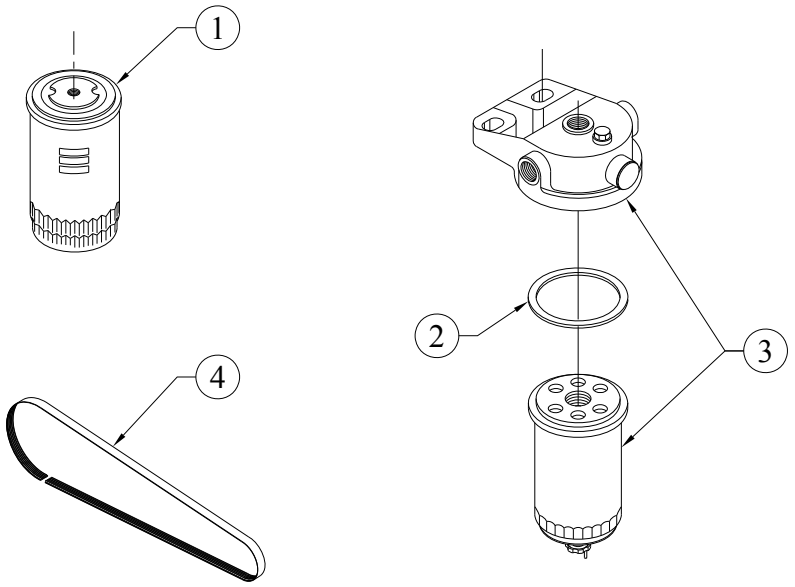

SR.NO.	PART NO.	DESCRIPTION	QTY.	REMARKS
1	04.270.01.0.00	SPIN ON FILTER FOR LUBRICATING OIL	1	
2	03.922.41.0.00	SEALING RING FOR FUEL FILTER	1	
3	03.922.42.0.00	FUEL FILTER ELEMENT	1	
4	4H.1493.01.0.00	POLY V BELT	1	

TITLE: - L.O.HEADER (W/O OIL COOLER)	**GROUP: -** 2H.964.1

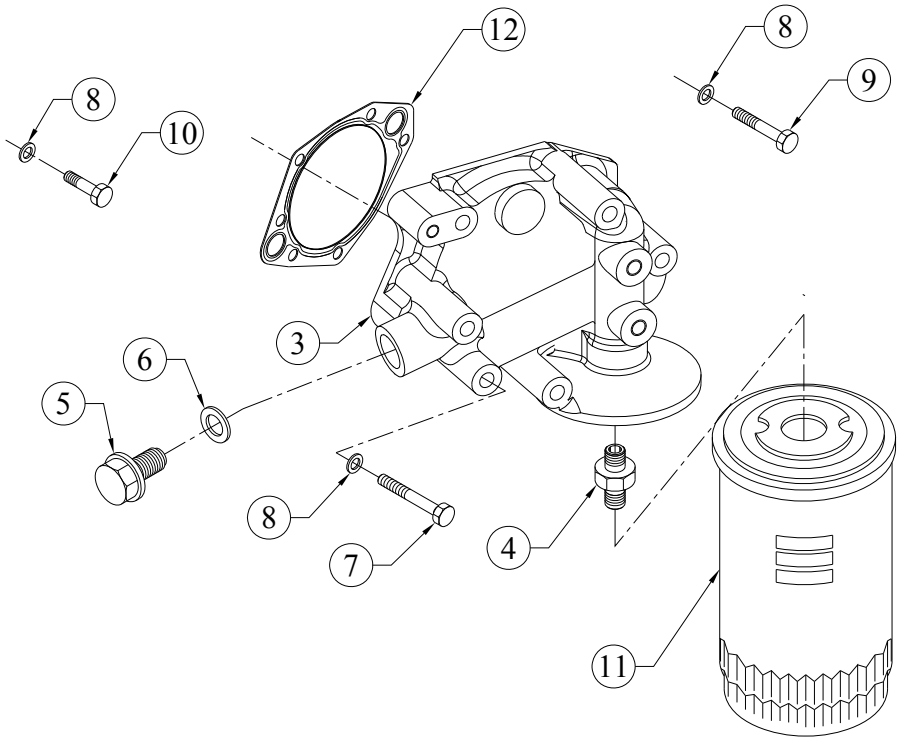

SR.NO.	PART NO.	DESCRIPTION	QTY.	REMARKS
*1	2H.964.30.0.00	L.O.HEADER ASSLY (W/O COOLER)	1	CONSISTING OF SR. NO. 2, 7 TO 10
*2	2H.964.40.0.00	HEADER SUB ASSLY (WITH L.O. FILTER)	1	CONSISTING OF SR. NO. 3 TO 6
3	2H.964.04.0.00	HEADER (FOR SPIN ON FILTER) (WITHOUT COOLER)	1	
4	3H.007.05.0.00	ADAPTOR FOR SPIN ON FILTER	1	
5	50.602.18.000.	CORE PLUG	1	
6	50.508.16.000.	COPPER WASHER (18X22)	1	
7	50.002.08.080.	SET BOLT - M8X1.25X80 - 8.8	2	
8	50.506.08.000.	PLAIN MACHINED WASHER - M8	6	
9	50.002.08.060.	SET BOLT - M8X1.25X60 - 8.8	2	
10	50.002.08.040.	SET BOLT - M8X1.25X40 - 8.8	2	
11	04.270.01.0.00	SPIN ON FILTER FOR LUBRICATING OIL	1	
12	3H.007.15.0.00	JOINT FOR HEADER	1	

TITLE: - LIFTING HOOK (TURBO ENGINE)	**GROUP: -** 4H.170

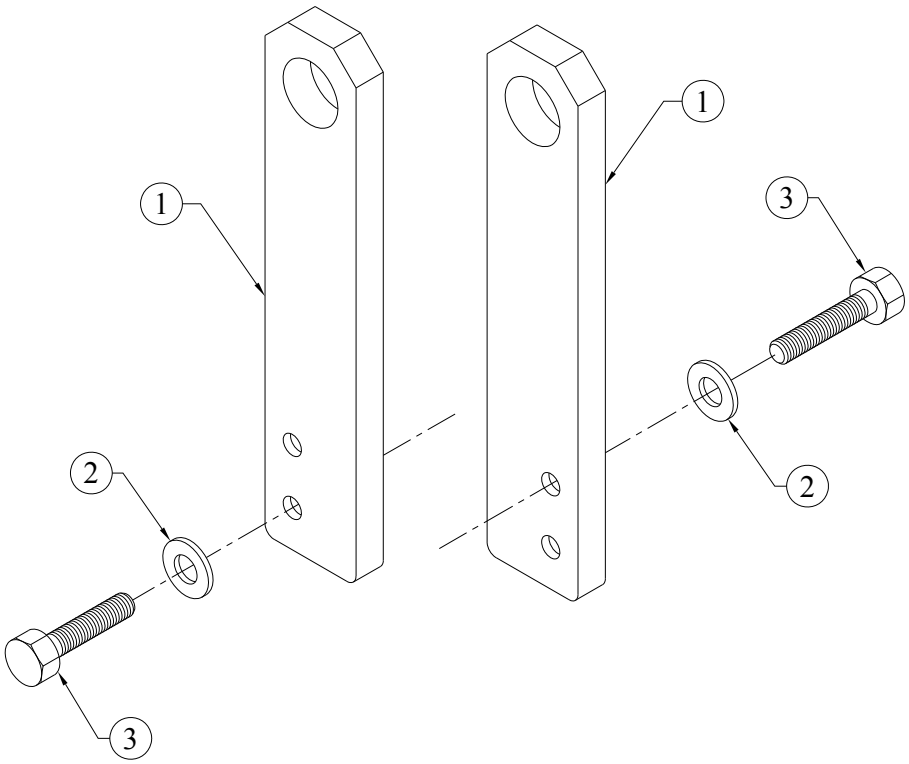

SR.NO.	PART NO.	DESCRIPTION	QTY.	REMARKS
1	4H.170.01.0.00	LIFTING HOOK	2	
2	50.506.10.000.	PLAIN MACHINED WASHER - M10	4	
3	50.003.10.030.	SET SCREW - M10X1.5X30 - 8.8	4	

TITLE: -LOOSE ITEMS TO BE SUPPLIED WITH 2R ENGINE	**GROUP: -** 3H.216.6

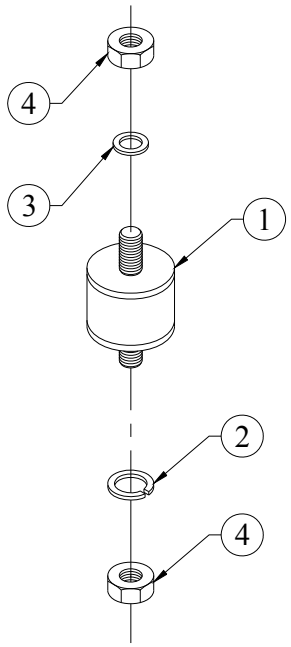

SR.NO.	PART NO.	DESCRIPTION	QTY.	REMARKS
1	48.213.08.0.00	ANTIVIBRATION MTG.-BOTTOM, RADIATOR.	2	
2	50.505.10.000.	SPRING WASHER - M10	4	
3	50.548.10.000.	SPECIAL PLAIN WASHER - M10	4	
4	50.006.10.000.	NUT - M10X1.5 - GR.8.8	4	

TITLE: - LUB OIL DRAIN ARRANGEMENT	**GROUP: -** 3H.345.17

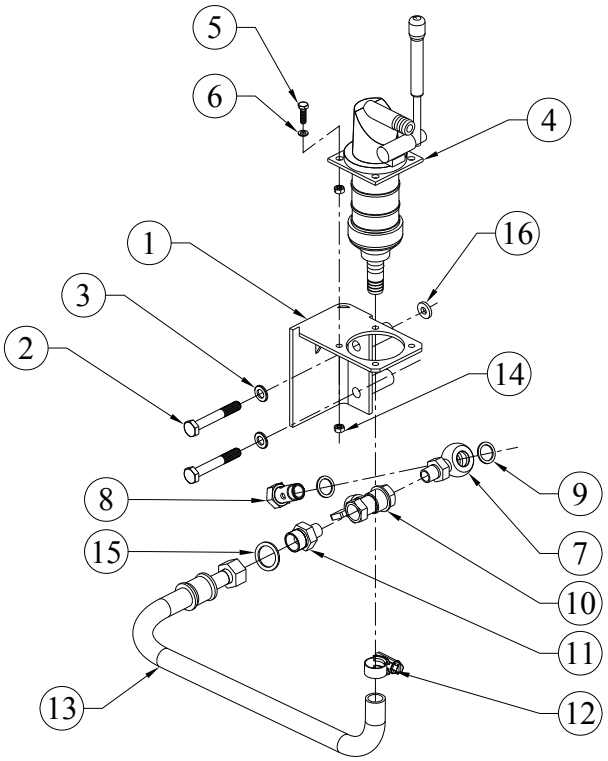

SR.NO.	PART NO.	DESCRIPTION	QTY.	REMARKS
1	2H.320.07.0.00	LUB. OIL PUMP MOUNTING BRACKET (ENGINE MOUNTING FOOT MOUNTED)	1	
2	50.002.10.075.	SET BOLT - M10X1.5X75 - 8.8	2	
3	50.506.10.000.	PLAIN MACHINED WASHER - M10	2	
4	3H.345.10.0.00	LUB. OIL DRAIN HAND PUMP ASSEMBLY (SAM INTEGRATION PVT. LTD, PUNE)	1	
5	50.003.06.020.	SET SCREW - M6X1X20 - 8.8	4	
6	50.506.06.000.	PLAIN MACHINED WASHER - M6	4	
7	3H.147.04.0.00	ADAPTOR FOR OIL SUMP (MALE, BENJO TYPE)	1	
8	50.504.06.000.	BANJO BOLT - M18X1.5	1	
9	50.508.17.000.	COPPER WASHER (18X24)	2	
10	3H.153.11.0.00	DRAIN COCK	1	
11	3H.147.03.0.00	ADAPTOR FOR OIL SUMP (MALE BOTH SIDE TYPE)	1	
12	2H.064.03.0.00	WORM DRIVE HOSE CLIP (JUPITOR JW7B9, 20 - 25 DIA)	1	

TITLE: - LUB OIL DRAIN ARRANGEMENT	**GROUP: -** 3H.345.17

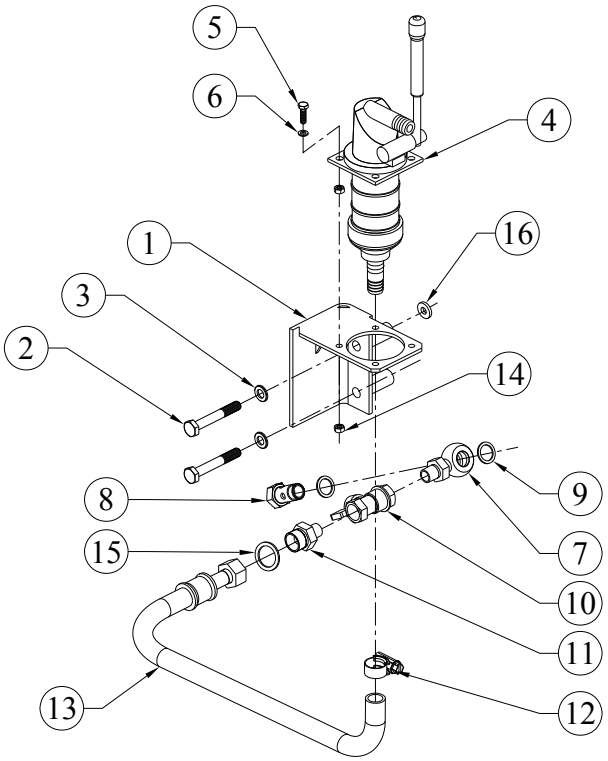

SR.NO.	PART NO.	DESCRIPTION	QTY.	REMARKS
13	4H.1285.07.0.00	LUB. OIL SUMP DRAIN PIPE S/F NEW LUB. OIL HAND PUMP	1	
14	50.006.06.000.	NUT - M6X1 - GR.8	4	
15	50.508.23.000.	COPPER WASHER (22X27)	1	
16	02.430.03.0.00	WASHER (ID 13 X OD 30 X 5TH) FOR ALTERNATOR	1	

TITLE: - LUB OIL PUMP	**GROUP: -** 3H.005.2

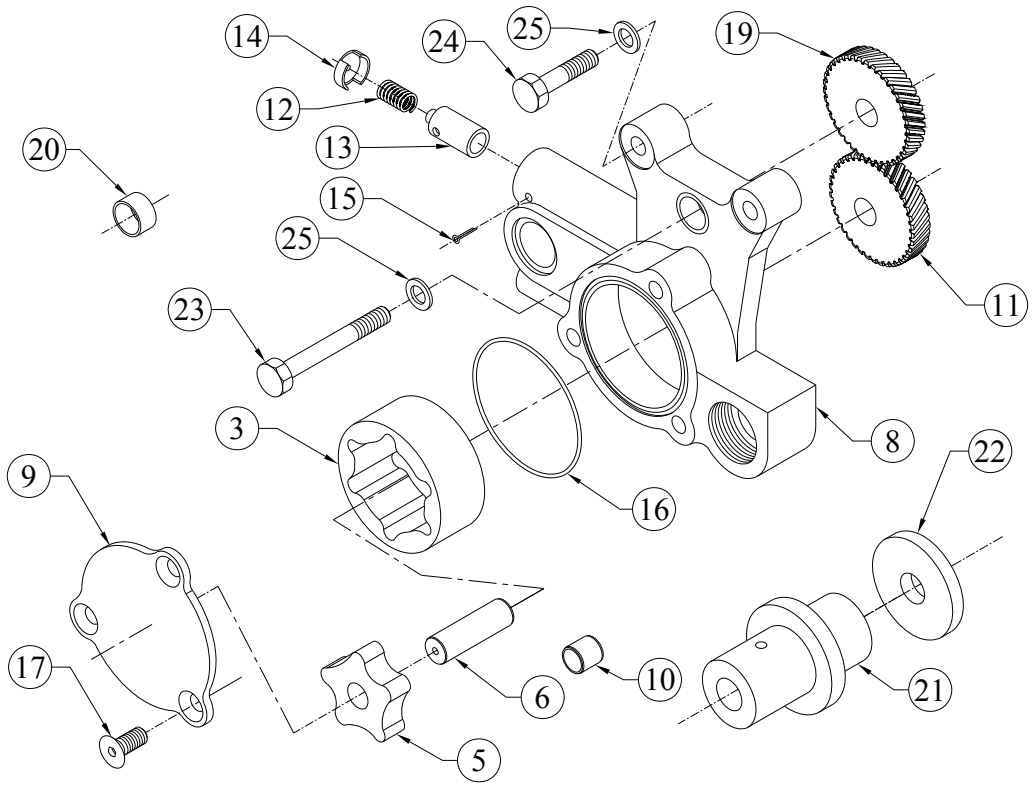

SR.NO.	PART NO.	DESCRIPTION	QTY.	REMARKS
*1	3H.005.70.0.00	LUB OIL PUMP SUB ASSEMBLY	1	CONSISTING OF SR. NO.3
*2	3H.005.95.0.00	LUB OIL PUMP ASSLY.	1	CONSIST. OF SR. NO. 3,4, & 7
3	03.010.17.0.00	OUTER ROTOR	1	NOT SUPPLIED LOOSE
*4	3H.005.40.0.00	ROTOR SUB ASSLY.(W/O KEY)	1	CONSIST. OF SR. NO. 5,6
5	03.010.22.0.00	INNER ROTOR	1	NOT SUPPLIED LOOSE
6	03.010.23.0.00	SHAFT FOR INNER ROTOR	1	NOT SUPPLIED LOOSE
*7	3H.005.80.0.00	LUB OIL PUMP ASSEMBLY KIT	1	CONSIST. OF SR. NO. 8 TO 17
8	3H.005.01.0.00	L.O.PUMP BODY(COMPACT VERSION)(FINISH)	1	NOT SUPPLIED LOOSE
9	06.010.02.0.00	COVER PLATE	1	NOT SUPPLIED LOOSE
10	03.010.05.0.00	BUSH FOR L.O.PUMP BODY	1	NOT SUPPLIED LOOSE

TITLE: - LUB OIL PUMP	**GROUP: -** 3H.005.2

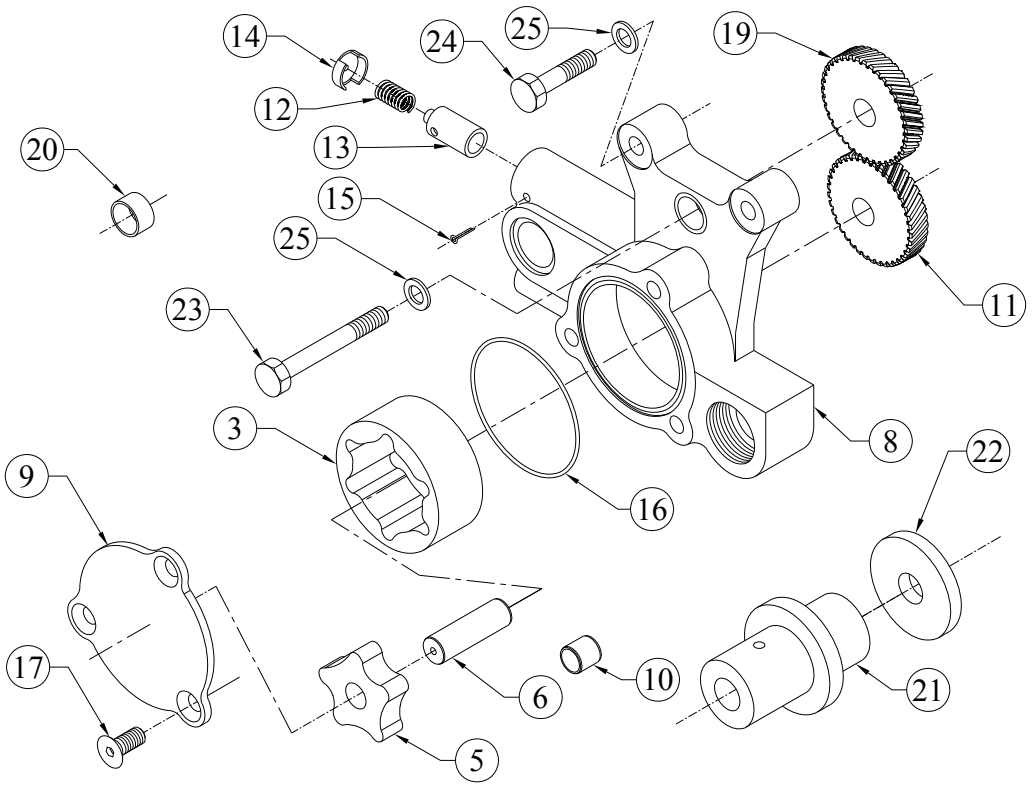

SR.NO.	PART NO.	DESCRIPTION	QTY.	REMARKS
11	3H.005.04.0.00	LUB.OIL PUMP DRIVING GEAR(FINISH)	1	NOT SUPPLIED LOOSE
12	03.010.26.0.00	SPRING (FOR RELIEF VALVE)	1	NOT SUPPLIED LOOSE
13	03.010.13.0.00	RELIEF VALVE	1	NOT SUPPLIED LOOSE
14	03.010.15.0.00	CUP FOR SPRING	1	NOT SUPPLIED LOOSE
15	50.036.07.010.	SPLIT COTTER PIN - 1/8"X1-1/2"	1	
16	03.010.11.0.00	O RING - L.O.PUMP (1.57X65,21508)	1	
17	06.010.01.0.00	COUNTER SUNK SOCKET HEAD SCREW.	3	
*18	3H.005.30.0.00	SUB.ASSLY.OF L.O.PUMP INT.GEAR AND BUSH.	1	CONSIST. OF SR. NO. 19,20
19	3H.005.03.0.00	INTERMEDIATE GEAR(FOR L.O.PUMP)(FINISH)	1	
20	34.014.12.0.00	BUSH FOR LEVER	1	
21	4H.372.01.0.00	SHAFT FOR LUB OIL PUMP (INTERMEDIATE GEAR)	1	NOT SUPPLIED LOOSE

TITLE: - LUB OIL PUMP	**GROUP: -** 3H.005.2

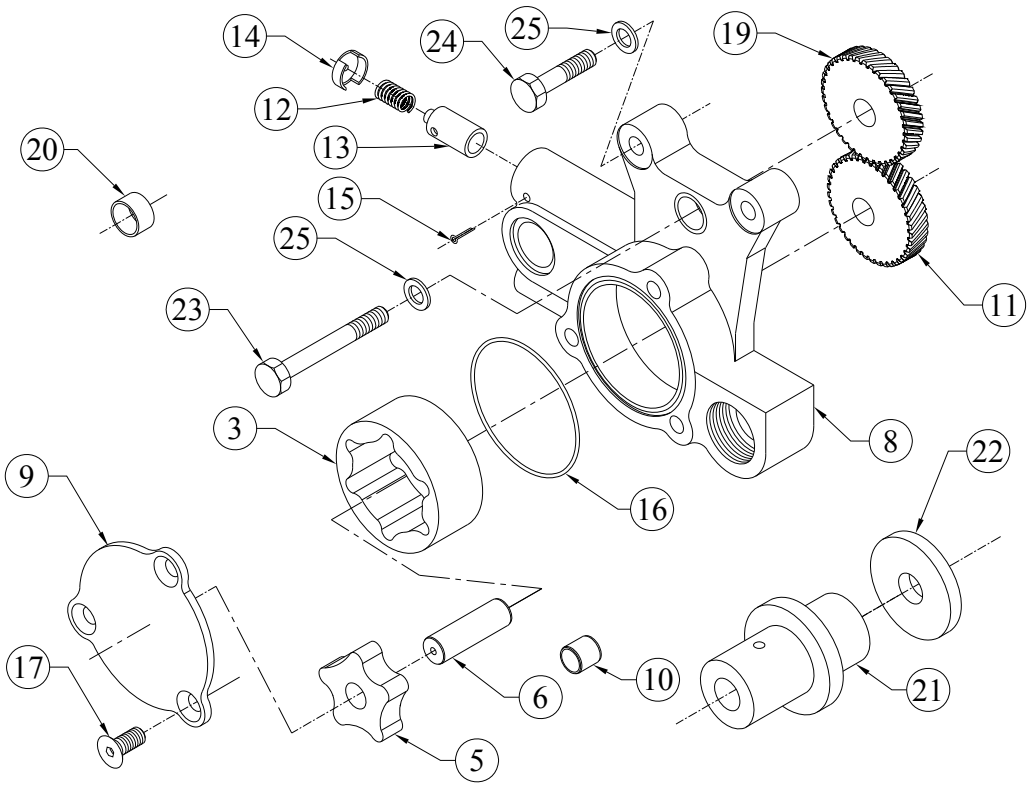

SR.NO.	PART NO.	DESCRIPTION	QTY.	REMARKS
22	4H.372.02.0.00	HARD WASHER (FOR INT. GEAR)	1	
23	50.002.08.075.	SET BOLT - M8X1.25X75 - 8.8	1	
24	50.002.08.035.	SET BOLT - M8X1.25X35 - 8.8	2	
25	50.506.08.000.	PLAIN MACHINED WASHER - M8	3	

TITLE: - LUB OIL SUMP (SHEET METAL FOR 2R1040 GENSET)	**GROUP: -** 2H.072

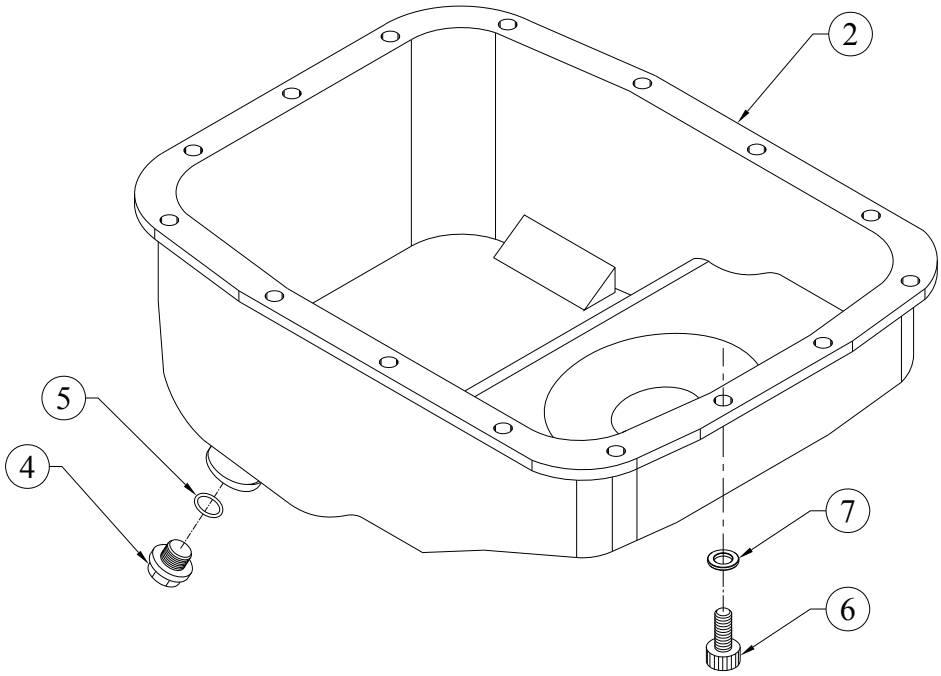

SR.NO.	PART NO.	DESCRIPTION	QTY.	REMARKS
*1	02.539.30.0.00	LUB OIL SUMP (FLAT FACE)	1	CONSISTING OF SR. NO.- 2 & 3
2	02.539.11.0.00	LUB. OIL SUMP (PRESSED)	1	
*3	2H.035.20.0.00	PLUG WITH MAGNET & 'O'RING.	1	CONSISTING OF SR. NO.- 4 & 5
4	2H.035.10.0.00	DRAIN PLUG ASSEMBLY.	1	
5	F6.024.47.0.00	O - RING FOR DRAIN PLUG	1	
6	50.011.08.016.	SOCKET HEAD SCREW - M8X1.25X16 - 8.8	15	
7	06.074.16.0.00	WASHER (SHEET METAL L.O.SUMP)	15	

TITLE: - STARTER 12VDC 2.7KW SUITABLE FOR - 20 deg. C	**GROUP: -** 2H.301

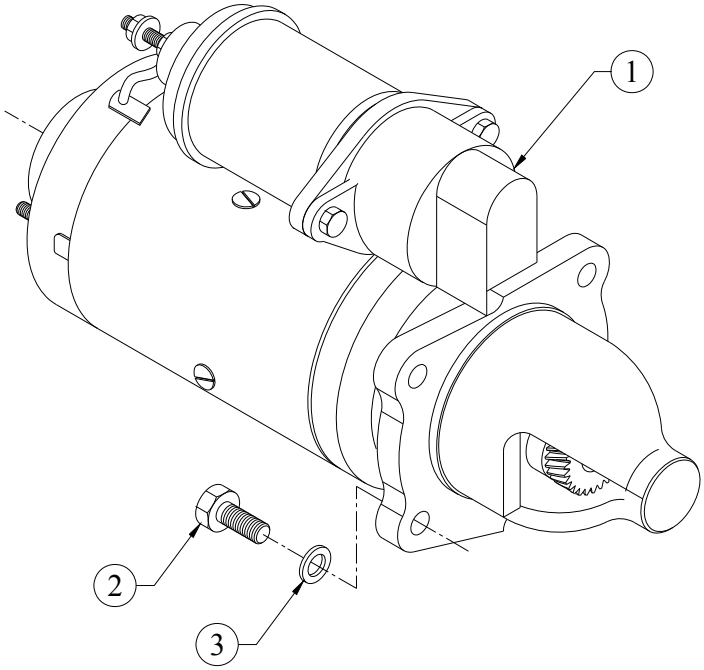

SR.NO.	PART NO.	DESCRIPTION	QTY.	REMARKS
1	2H.301.01.0.00	STARTER 12VDC 2.7KW SUITABLE FOR - 20 deg.	1	
2	50.003.10.030	SET SCREW - M10X1.5X30 - 8.8	3	
3	50.506.10.000	PLAIN MACHINED WASHER - M10	3	

TITLE: - MONOBLOCK CRANKCASE	**GROUP: -** 2H.001.1

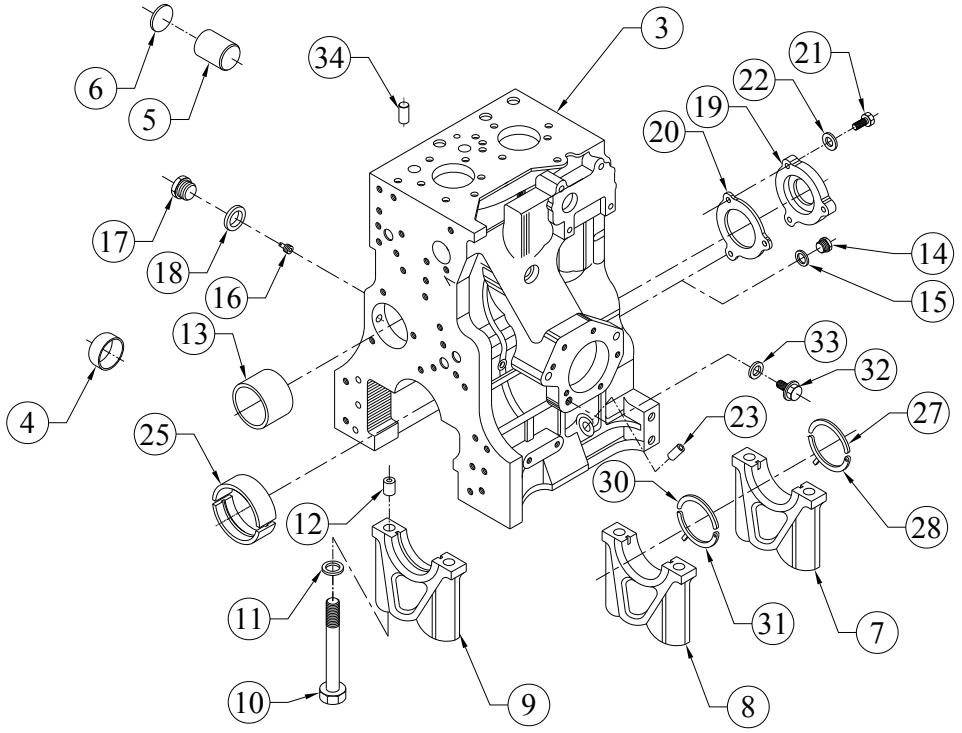

SR.NO.	PART NO.	DESCRIPTION	QTY.	REMARKS
*1	2H.001.60.0.00	CRANKCASE ASSEMBLY	1	CONSISTING OF SR. NO. 2 & 13 TO 23
*2	2H.001.50.0.00	CRANKCASE SUB ASSEMBLY	1	CONSISTING OF SR. NO. 3 TO 12
3	2H.001.02.0.00	CRANKCASE (LIGHTWEIGHT) (FINISH)	1	NOT SUPPLIED LOOSE
4	F6.001.58.0.00	SEALING CAP.(40 DIN 443)	2	
5	34.003.07.0.00	CRANK SHAFT PLUG - ALUMINIUM	2	
6	34.003.08.0.00	WASHER FOR ALU.PLUG.	2	
7	03.001.23.0.00	M.B.CAP (FWE)16.99 DIA.DOWEL HOLE	1	NOT SUPPLIED LOOSE
8	03.001.24.0.00	M.B.CAP (KHD)16.99DIA DOWEL HOLES	1	NOT SUPPLIED LOOSE
9	4H.001.02.0.00	BEARING CAP(GEAR END)(FINISH)	1	NOT SUPPLIED LOOSE

TITLE: - MONOBLOCK CRANKCASE	**GROUP: -** 2H.001.1

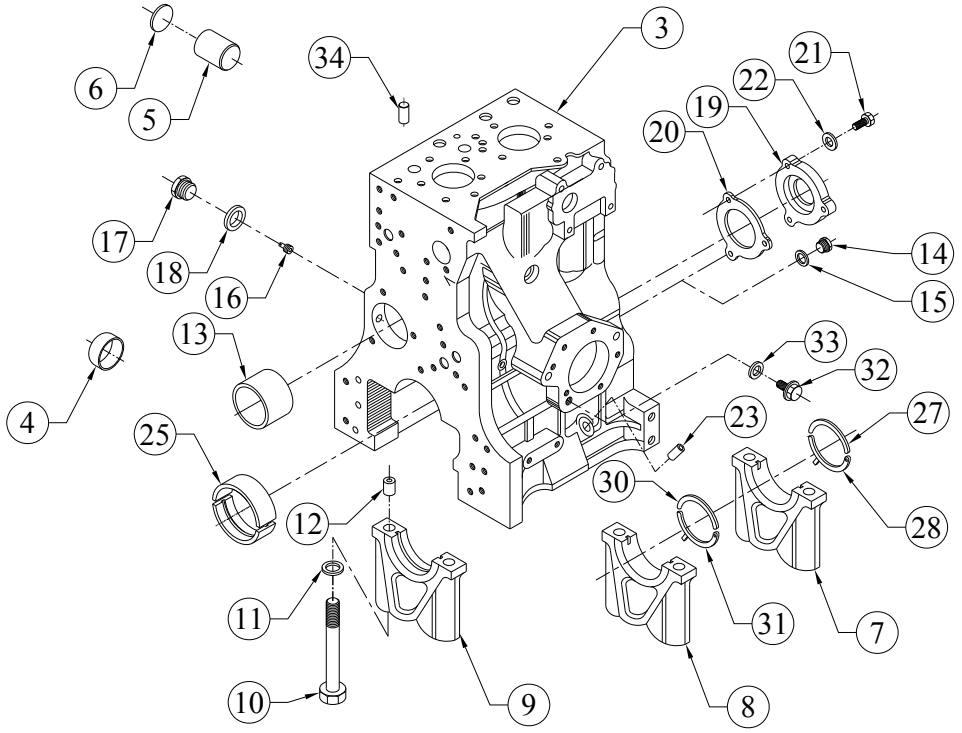

SR.NO.	PART NO.	DESCRIPTION	QTY.	REMARKS
10	03.001.22.0.00	BOLT FOR MB CAP(HEX HEAD) M14X2X128	6	
11	02.001.04.0.00	SPECIAL WASHER FOR M14 BOLT	6	
12	B2.005.16.0.00	HOLLOW DOWEL(M.B.CAP)	6	
13	03.001.04.0.00	CAM BUSH	1	
14	04.001.08.0.00	PRECOATED SCREW PLUG	1	
15	50.508.19.000.	COPPER WASHER (20X26)	1	
16	03.001.07.0.00	SLOTTED PIN	3	
17	4H.001.22.0.00	PRECOATED PLUG	3	
18	50.508.10.000.	COPPER WASHER (12X18)	3	
19	4H.001.03.0.00	BLANKING PLATE FOR CAM BORE	1	
20	4H.001.14.0.00	JOINT FOR CAM BORE BLANKING PLATE	1	
21	50.003.08.025.	SET SCREW - M8X1.25X25 - 8.8	3	
22	50.506.08.000.	PLAIN MACHINED WASHER - M8	3	
23	02.037.04.0.00	DIPSTICK GUIDE	1	

TITLE: - MONOBLOCK CRANKCASE	**GROUP: -** 2H.001.1

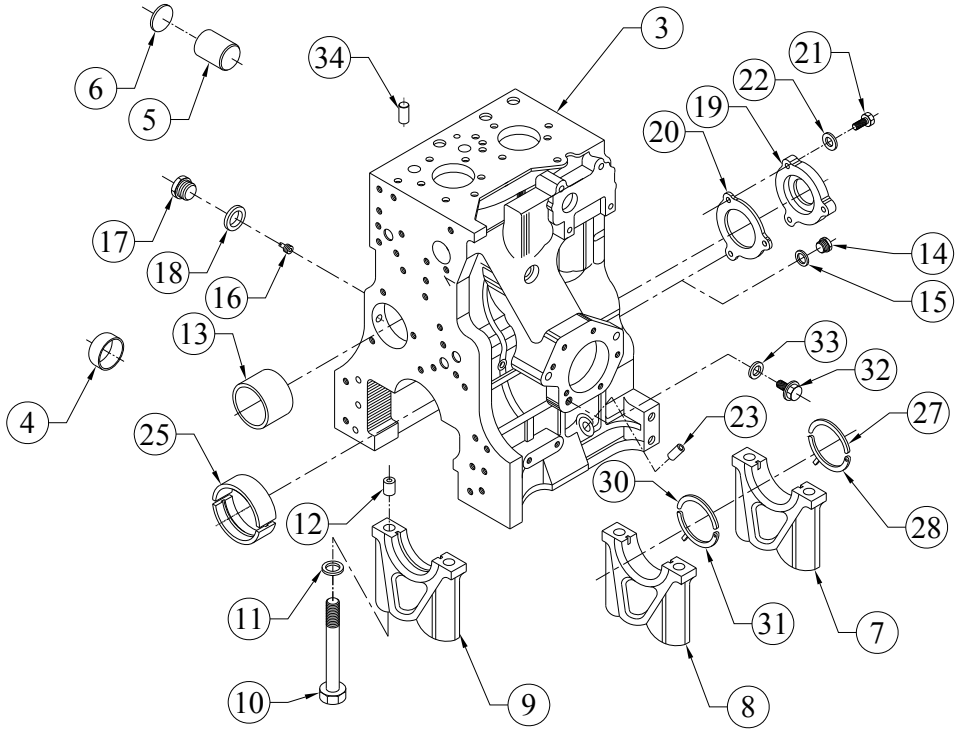

SR.NO.	PART NO.	DESCRIPTION	QTY.	REMARKS
*24	02.001.07.0.00	MAIN BRG TOP & BOTTOM	3	CONSISTING OF SR. NO. 25 REFER TO SET OF BEARINGS INDEX PAGE
25	02.001.87.0.00	MAIN BEARING HALF(STANDARD)	2	
*26	03.001.18.0.00	THRUST RING PAIR-DRIVE END,102 DIA.)	1	CONSISTING OF SR. NO. 27,28
27	03.001.19.0.00	THRUST WASHER -DRIVE END,TOP	1	
28	03.001.21.0.00	THRUST WASHER (DRIVE END,BOTTOM)	1	
*29	B2.005.22.0.00	THRUST RING PAIR-G.E.	1	CONSISTING OF SR. NO. 30, 31
30	B2.005.18.0.00	THRUST RING HALF(G.E.-TOP)	1	
31	B2.005.19.0.00	THRUST RING HALF(G.E.-BOTTOM)	1	
32	50.602.14.000.	PLUG (M14X1.5)	1	

TITLE: - MONOBLOCK CRANKCASE	**GROUP: -** 2H.001.1

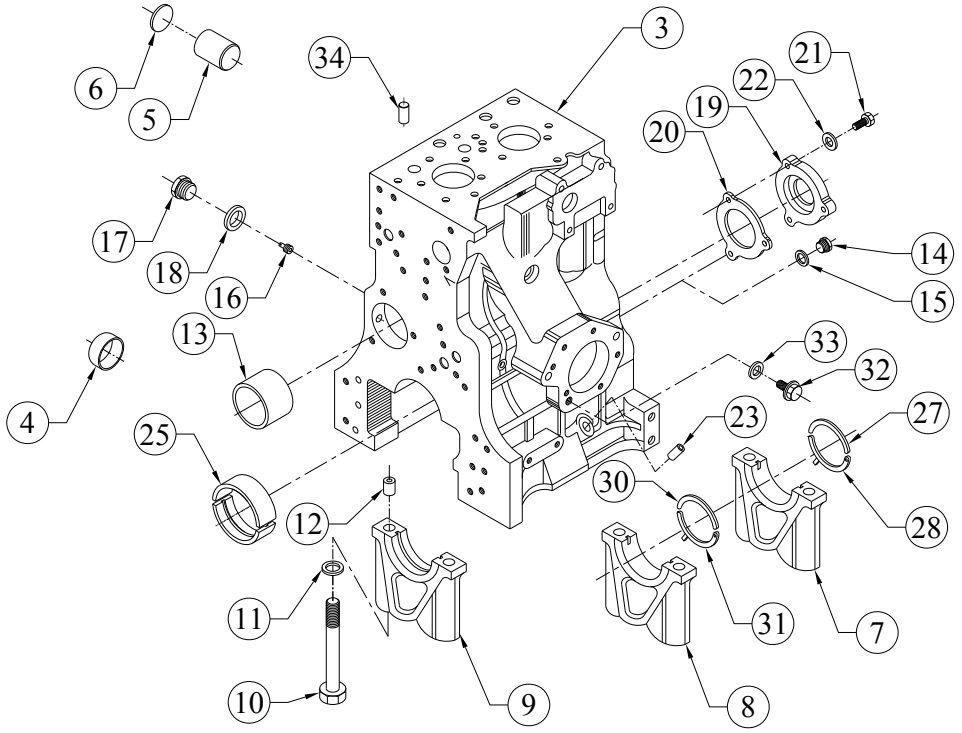

SR.NO.	PART NO.	DESCRIPTION	QTY.	REMARKS
33	50.508.12.000.	COPPER WASHER (14X20)	1	
34	50.401.08.014.	DOWEL	2	

TITLE: - NAME PLATE	**GROUP: -** 38.065

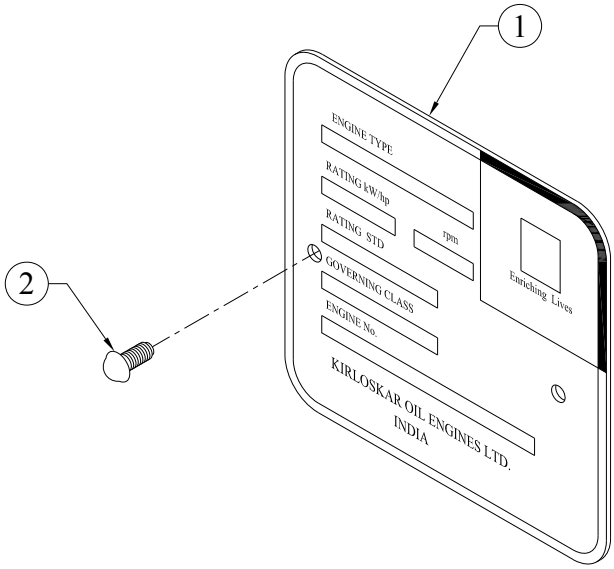

SR.NO.	PART NO.	DESCRIPTION	QTY.	REMARKS
1	38.065.03.0.00	NAME PLATE	1	
2	10.046.02.0.00	P K DRIVE SCREW 1/8"X3/8" (RIVET)	2	

TITLE: - NAME PLATE FOR KG GENSET	**GROUP: -** 3H.227

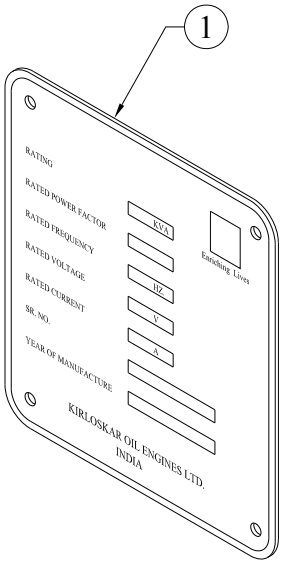

SR.NO.	PART NO.	DESCRIPTION	QTY.	REMARKS
1	3H.227.01.0.00	NAME PLATE FOR GENSET	1	

TITLE: - OIL SEAL HOUSING (PG S/F SHEET METAL SUMP)	**GROUP: -** 2H.039

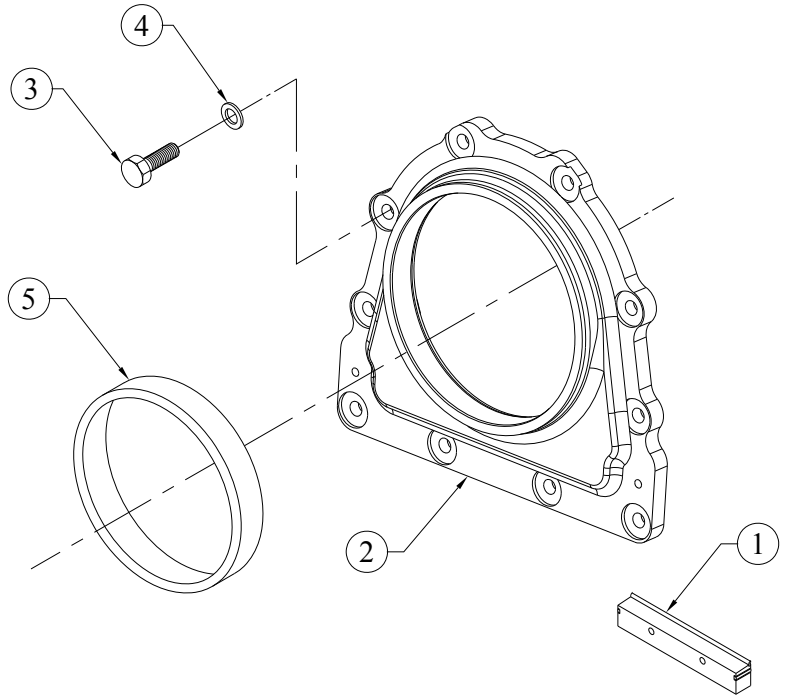

SR.NO.	PART NO.	DESCRIPTION	QTY.	REMARKS
1	2H.039.10.0.00	PLATE WITH RUBBER MOULDING (FOR FWE OIL SEAL HSG.)	1	
2	2H.006.01.0.00	OIL SEAL HSG.(F.W.E.)	1	
3	50.003.08.020.	SET SCREW - M8X1.25X20 - 8.8	10	
4	50.506.08.000.	PLAIN MACHINED WASHER - M8	10	
5	03.007.06.0.00	OIL SEAL (115X140X16) CR MAKE	1	

TITLE: - PISTON AND CON ROD (HM)	**GROUP: -**3H.106

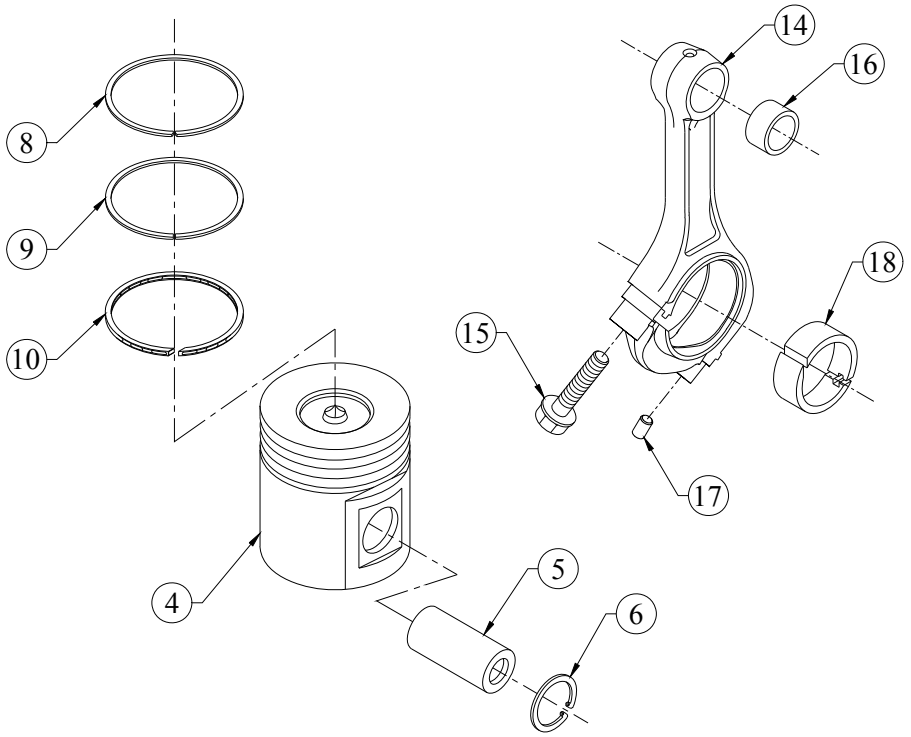

SR.NO.	PART NO.	DESCRIPTION	QTY.	REMARKS
*1	3H.106.40.0.00	PISTON AND CON ROD ASSEMBLY	1	CONSISTING OF SR. NO.2 NOT SUPPLIED ASSEMBLY
*2	3H.106.30.0.00	PISTON ASSEMBLY COMPLETE	1	CONSISTING OF SR. NO.3
*3	3H.106.20.0.00	PISTON WITH PIN AND CIRCLIP	1	CONSISTING OF SR. NO. 4 TO 6
4	3H.106.01.0.00	PISTON HIGH COMP RATION	1	NOT SUPPLIED LOOSE
5	34.025.24.0.00	PISTON PIN	1	
6	50.502.35.000.	CIRCLIP (INTERNAL)-35 MM	2	
*7	2H.009.30.0.00	PISTON RING SET (105 DIA.)	1	CONSISTING OF SR. NO. 8 TO 10
8	2H.009.02.0.00	TOP RING (105 DIA)	1	NOT SUPPLIED LOOSE
9	2H.009.03.0.00	COMPRESSION RING (105 DIA)	1	NOT SUPPLIED LOOSE

TITLE: - PISTON AND CON ROD (HM)	**GROUP: -**3H.106

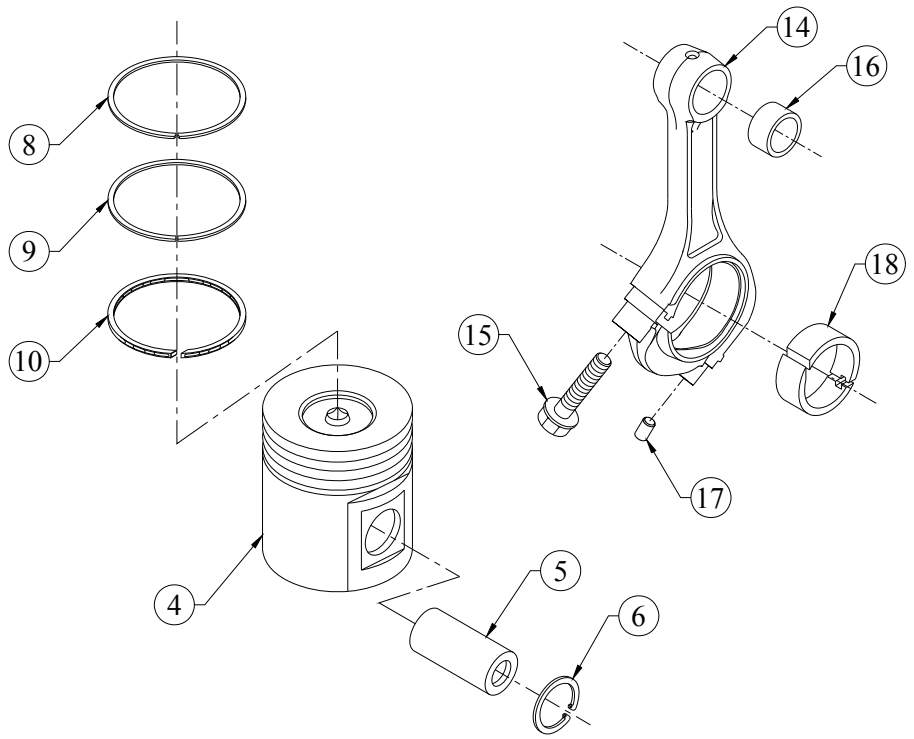

SR.NO.	PART NO.	DESCRIPTION	QTY.	REMARKS
10	2H.009.04.0.00	OIL CONTROL RING (105 DIA)	1	NOT SUPPLIED LOOSE
*11	04.685...	CONNECTING ROD (DREAM PROJECT)	1	CONSISTING OF SR. NO.12
*12	04.685.10.0.00	CONNECTING ROD ASSEMBLY	1	CONSISTING OF SR. NO.13
*13	04.685.20.0.00	CON ROD ASSEMBLY (WITHOUT LE BEARING)	1	CONSISTING OF SR. NO. 14 TO 17
14	04.685.01.0.00	CONNECTING ROD (DREAM PROJECT) MACHINING	1	NOT SUPPLIED LOOSE
15	04.692.03.0.00	CONNECTING ROD BOLT	2	
16	02.021.03.9.00	SMALL END BUSH (S/F)	1	
17	50.401.07.010.	DOWEL PIN	2	
18	04.685.02.0.00	CONNECTING ROD BIG END BEARING(NA)	2	NOT SUPPLIED LOOSE

TITLE: - POLY V BELT	**GROUP: -** 4H.1493

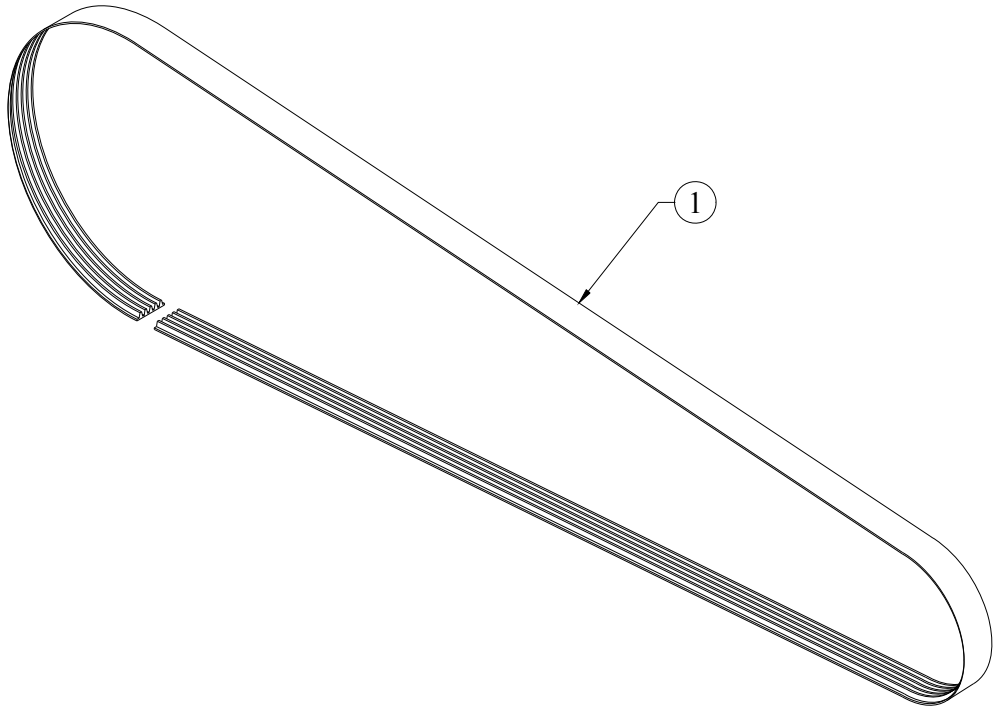

SR.NO.	PART NO.	DESCRIPTION	QTY.	REMARKS
1	4H.1493.01.0.00	POLY V BELT	1	

TITLE: - POWER HARNESS FROM ALTERNATOR TO CONTROL PANEL, 16 SQMM (NEUTRAL 16 SQMM) 3 PHASE, WITH POLYAMIDE CONDUIT OF GLAND SIZE FNC PG 29. CABLE LENGTH 1100MM, CONDUIT LENGTH 600MM	**GROUP: -** 2H.918.1

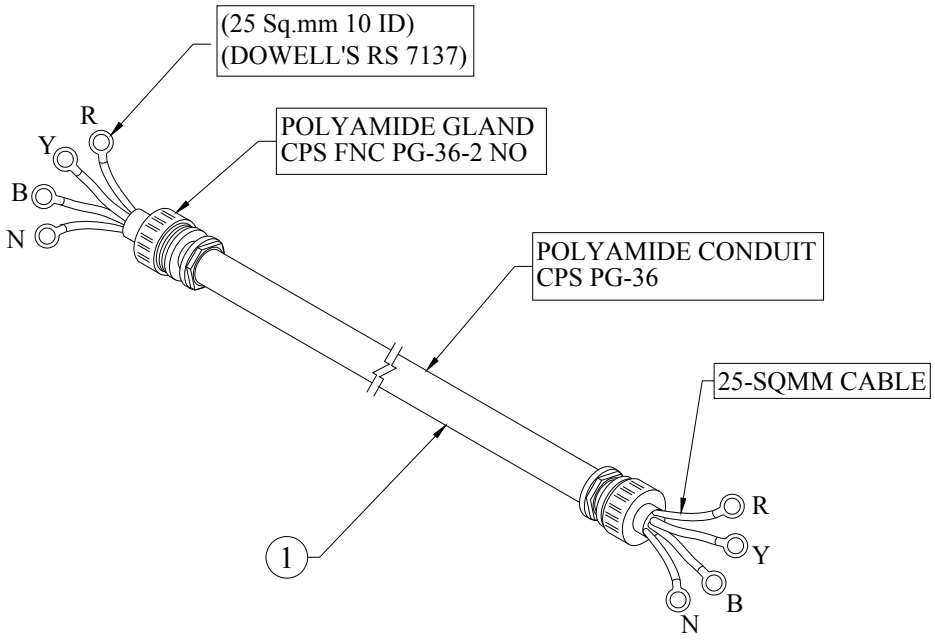

SR.NO.	PART NO.	DESCRIPTION	QTY.	REMARKS
1	2H.918.30.0.00	POWER HARNESS FROM ALTERNATOR TO CONTROL PANEL, 16 SQMM (NEUTRAL 16 SQMM), 3 PHASES, WITH POLYAMIDE CONDUIT OF GLAND SIZE FNC PG 29. CABLE LENGTH 1100MM, CONDUIT LENGTH 600MM	1	

TITLE:- PUSHROD & TAPPETS	**GROUP:-** 2H.007

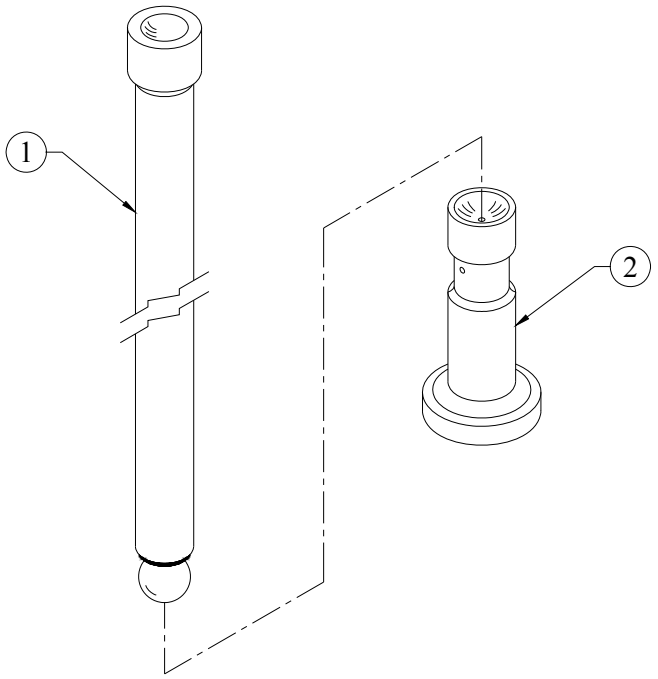

SR.NO.	PART NO.	DESCRIPTION	QTY.	REMARKS
1	02.024.70.0.00	PUSH ROD (WELDED)	2	
2	02.024.01.0.00	VALVE TAPPET	2	

TITLE :- RADIATOR FAN (430 DIA, PUSHER)	**GROUP :-** 4H.083.2

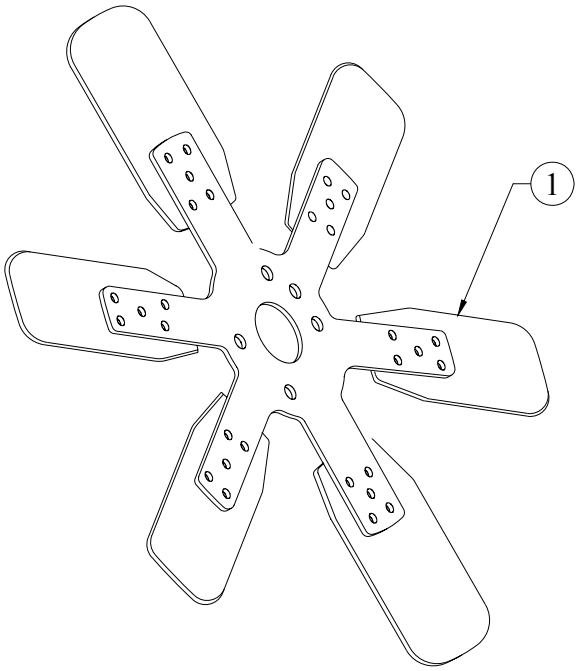

SR.NO.	PART NO.	DESCRIPTION	QTY.	REMARKS
1	48.212.01.0.00	RADIATOR FAN 17"DIA - PUSHER	1	

TITLE: - RADIATOR FAN MTG. WITH 30 MM SPACER (STAGE 1, PG)	**GROUP: -** 4H.083.6

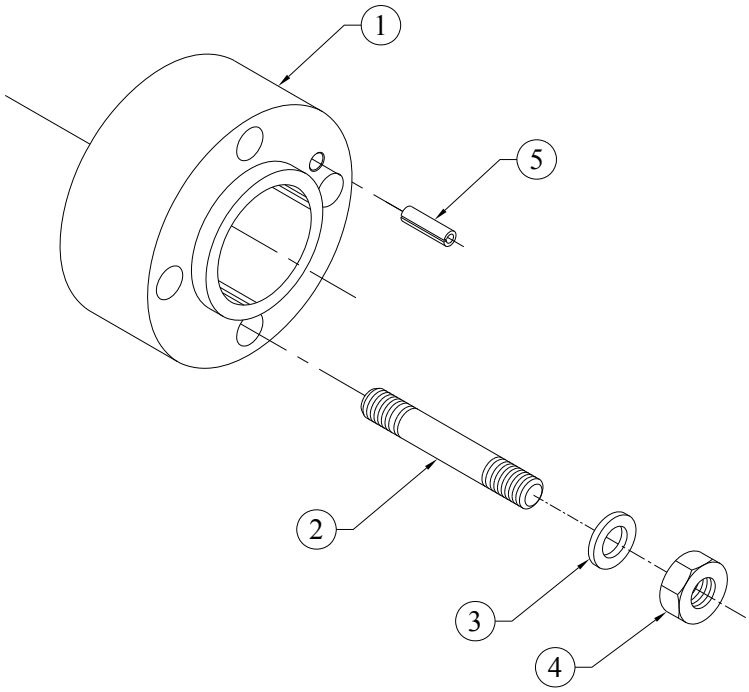

SR.NO.	PART NO.	DESCRIPTION	QTY.	REMARKS
1	4H.554.01.0.00	SPACER FOR RADIATOR FAN (30MM)	1	
2	50.010.08.055.	STUD - M8X1.25X55 - 8.8	4	
3	50.506.08.000.	PLAIN MACHINED WASHER - M8	4	
4	50.006.08.000.	NUT- M8X1.25 - GR.8.8	4	
5	50.540.09.016.	SPRING DOWEL PIN	1	

TITLE: -RADIATOR FOR CANOPIED GENSET	GROUP: - 2H.139.10

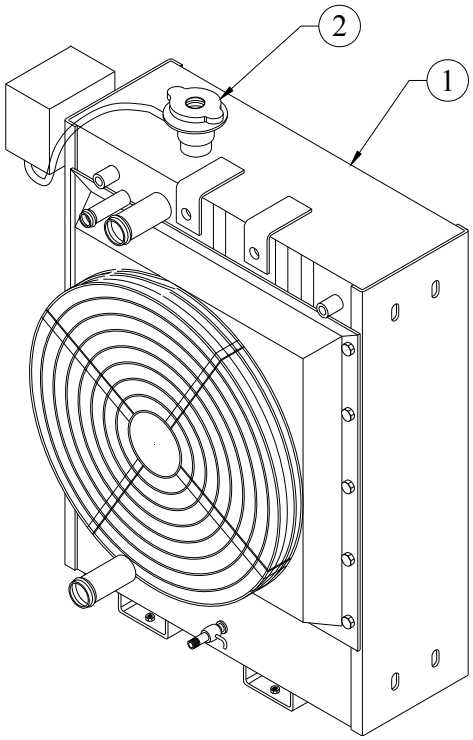

SR.NO.	PART NO.	DESCRIPTION	QTY.	REMARKS
1	2H.139.10.0.00	RADIATOR FOR CANOPIED GENSET	1	CONSISTING OF SR. NO. 2
2	48.213.03.0.00	RADIATOR CAP 13 PSI WITH 2SEALING WASHER	1	

TITLE: - 2R1040 RADIATOR MTG. ACCESSORIES FOR OPEN GENSET (EXPORT & P.U. PAINTED)	**GROUP: -** 3H.216.7

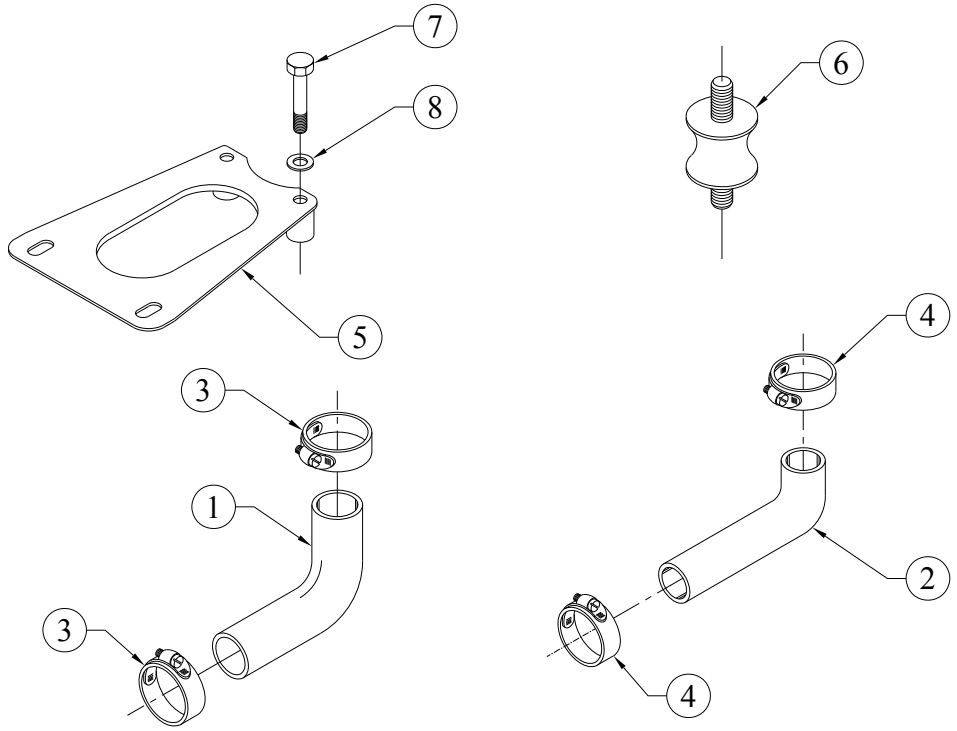

SR.NO.	PART NO.	DESCRIPTION	QTY.	REMARKS
1	4H.158.05.0.00	HOSE FOR WATER PUMP INLET PIPE TO RADIATOR OUTLET	1	
2	3H.029.05.0.00	HOSE(THERMOSTAT TO RADIATOR)(RT 200X65X38ID)	1	
3	4H.1712.24.0.00	HOSE T-BOLT CLAMP (DIA. 55-65)	2	
4	49.097.01.0.00	WORM DRIVE HOSE CLIP 38X54	2	
5	3H.030.04.0.00	STAY (FOR RADIATOR)	1	
6	44.035.05.0.00	ANTIVIBRATION MOUNTING	2	
7	50.002.08.050	SET BOLT - M8X1.25X50 - 8.8	2	
8	50.506.08.000	PLAIN MACHINED WASHER - M8	2	

TITLE: -RADIATOR WATER DRAIN CONNECTION FOR SHANTI PROJECT (1.4"NPTF)	**GROUP: -** 3H.153

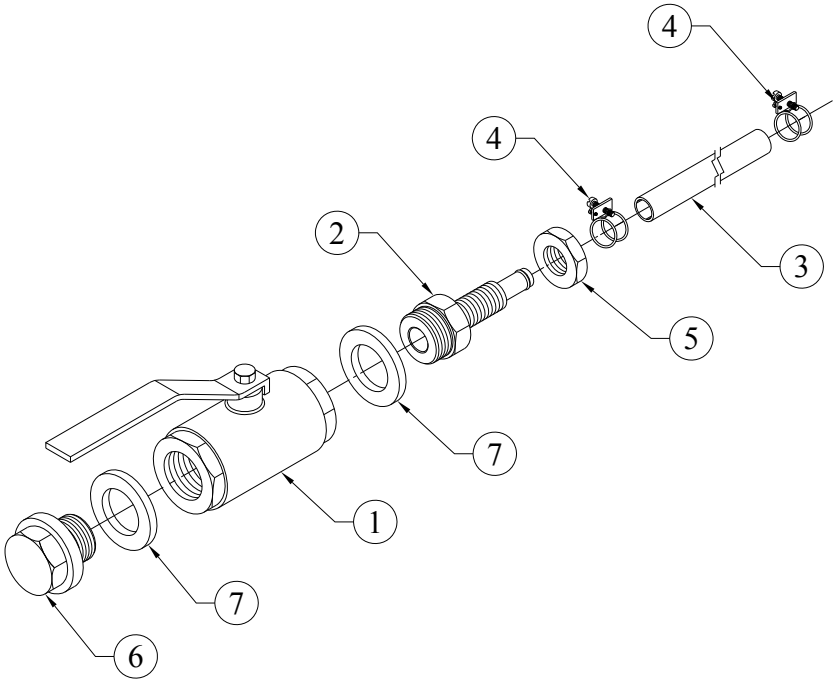

SR.NO.	PART NO.	DESCRIPTION	QTY.	REMARKS
1	3H.153.21.0.00	DRAIN COCK	1	
2	3H.153.02.0.00	ADAPTOR FOR DRAIN COCK (1/2" BSP MAIL)	1	
3	3H.153.09.0.00	RADIATOR DRAIN PIPE FOR 82.5 KVA INTERNACO PROJECT	1	
4	2H.112.01.0.00	SPRING BAND CLIP (KLIPCO/ NOMINAL DIA. 10))	2	
5	50.009.14.000	LOCK NUT - M14X1.5 - GR.8	1	
6	3H.153.08.0.00	PLUG (1/2" BSP) FOR DRAIN COCK	1	
7	50.506.14.000	PLAIN MACHINED WASHER - M14	2	

TITLE: - RESIDENTIAL SILENCER	**GROUP: -** 2H.161

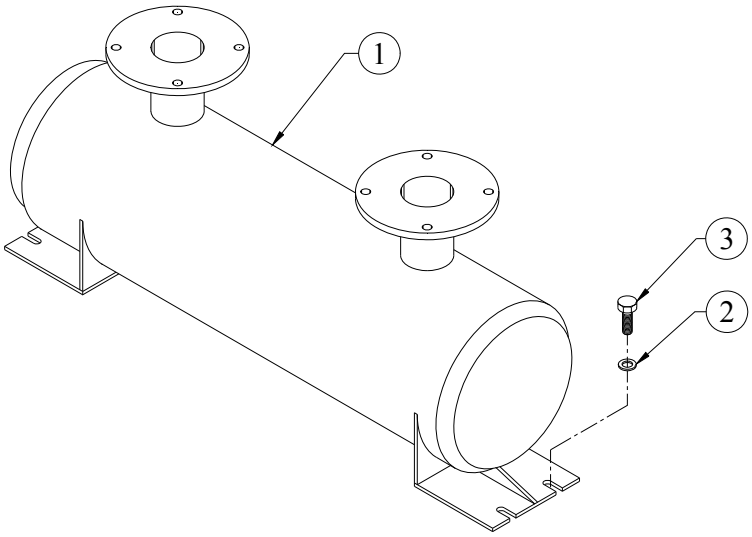

SR.NO.	PART NO.	DESCRIPTION	QTY.	REMARKS
1	2H.161.01.0.00	RESIDENTIAL SILENCER 17.5 KVA SILENT SET (GHANA)	1	
2	50.548.10.000.	SPECIAL WASHER	4	
3	50.003.10.025.	SET SCREW - M10X1.5X25 - 8.8	4	

TITLE:- ROCKER COVER	**GROUP:-** 2H.107

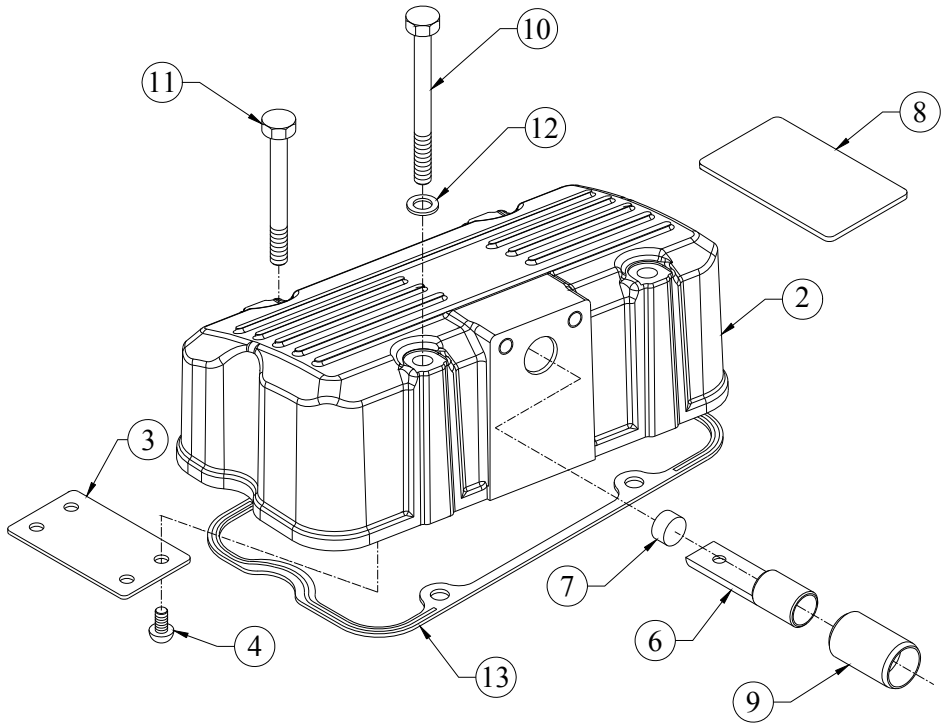

SR.NO.	PART NO.	DESCRIPTION	QTY.	REMARKS
*1	2H.107.10.0.00	SUB ASSEMBLY OF ROCKER COVER	1	CONSISTING. OF SR. NO. 2 TO 5
2	2H.107.01.0.00	ROCKER COVER	1	
3	4H.139.02.0.00	DEFLECTOR PLATE	1	
4	10.046.02.0.00	P K DRIVE SCREW 1/8"X3/8" (RIVET)	4	
*5	3H.049.30.0.00	BREATHER TUBE ASSEMBLY	1	CONSISTING. OF SR. NO. 6 TO 9
6	3H.049.11.0.00	TUBE FOR BREATHER	1	NOT SUPPLIED LOOSE
7	3H.049.12.0.00	CLOSING BUTTON	1	NOT SUPPLIED LOOSE
8	3H.049.13.0.00	PLATE	1	NOT SUPPLIED LOOSE
9	4H.139.03.0.00	ADAPTOR(FOR BREATHER TUBE)	1	NOT SUPPLIED LOOSE
10	50.002.08.095	SET BOLT - M8X1.25X95 - 8.8	2	

TITLE:- ROCKER COVER	**GROUP:-** 2H.107

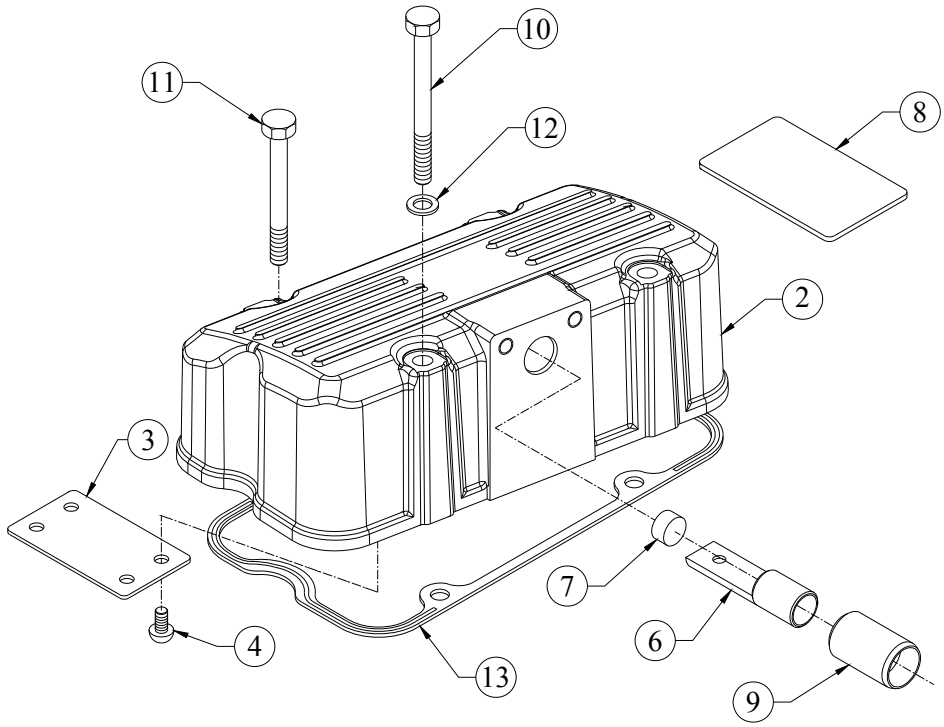

SR.NO.	PART NO.	DESCRIPTION	QTY.	REMARKS
11	50.002.08.070	SET BOLT - M8X1.25X70 - 8.8	2	
12	50.506.08.000	PLAIN MACHINED WASHER - M8	4	
13	2H.107.02.0.00	JOINT FOR ROCKER	1	

TITLE: - SET OF STICKERS FOR CANOPY SET (UP TO 50 KVA)	**GROUP: -** 38.065.2

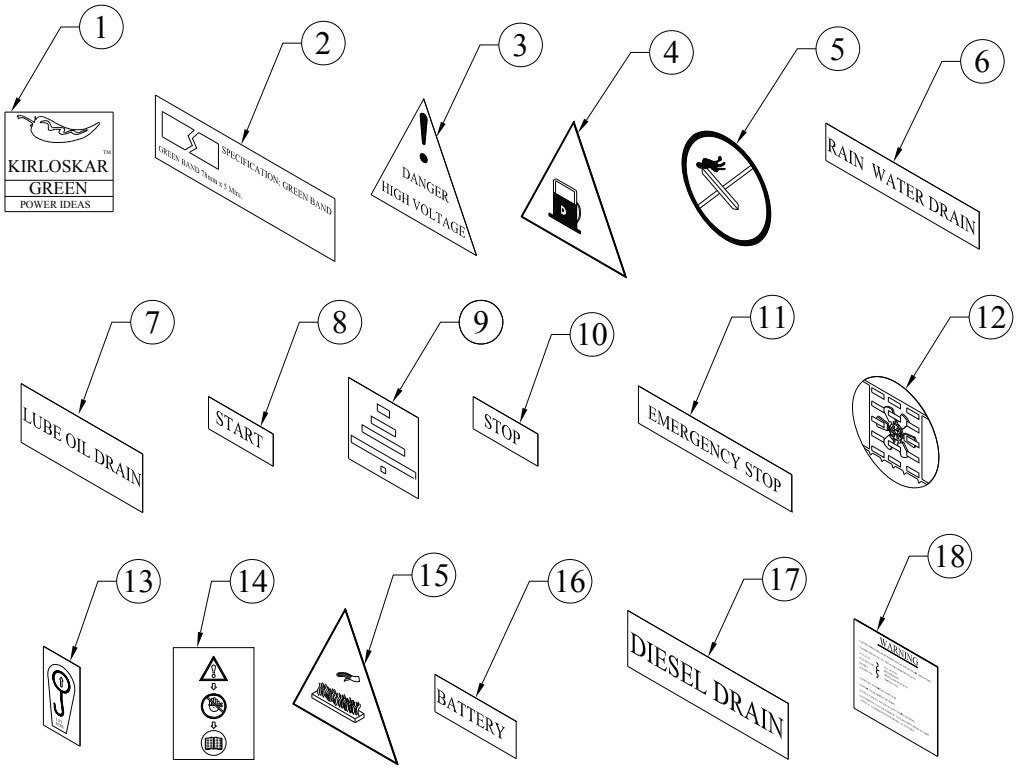

SR.NO.	PART NO.	DESCRIPTION	QTY.	REMARKS
1	2H.075.07.0.00	STICKER KIRLOSKAR GREEN POWER IDEAS 310X330MM	2	
2	2H.075.01.0.00	KIRLOSKAR GREEN BRAND STICKER 5M LENGTH.	1	
3	02.402.03.0.00	DANGER HIGH VOLTAGE STICKER	1	
4	38.065.67.0.00	STICKER FOR "FUEL"	1	
5	38.065.62.0.00	STICKER FOR FIRE (NO SMOKING)	1	
6	38.065.09.0.00	STICKER FOR "WATER DRAIN"	1	
7	38.065.08.0.00	STICKER FOR "LUB OIL DRAIN"	1	
8	38.065.11.0.00	STICKER FOR "START"	1	
9	38.065.13.0.00	STICKER FOR "EARTHING"	2	
10	38.065.07.0.00	STICKER FOR "STOP"	1	
11	38.065.04.0.00	STICKER FOR "EMERGENCY STOP"	1	
12	38.065.63.0.00	STICKER FOR "RADIATOR"	2	
13	38.065.72.0.00	CANOPY LIFTING STICKER_SMALL	1	
14	38.065.65.0.00	STICKER FOR "REFER MANUAL"	1	

TITLE: - SET OF STICKERS FOR CANOPY SET (UP TO 50 KVA)	**GROUP: -** 38.065.2

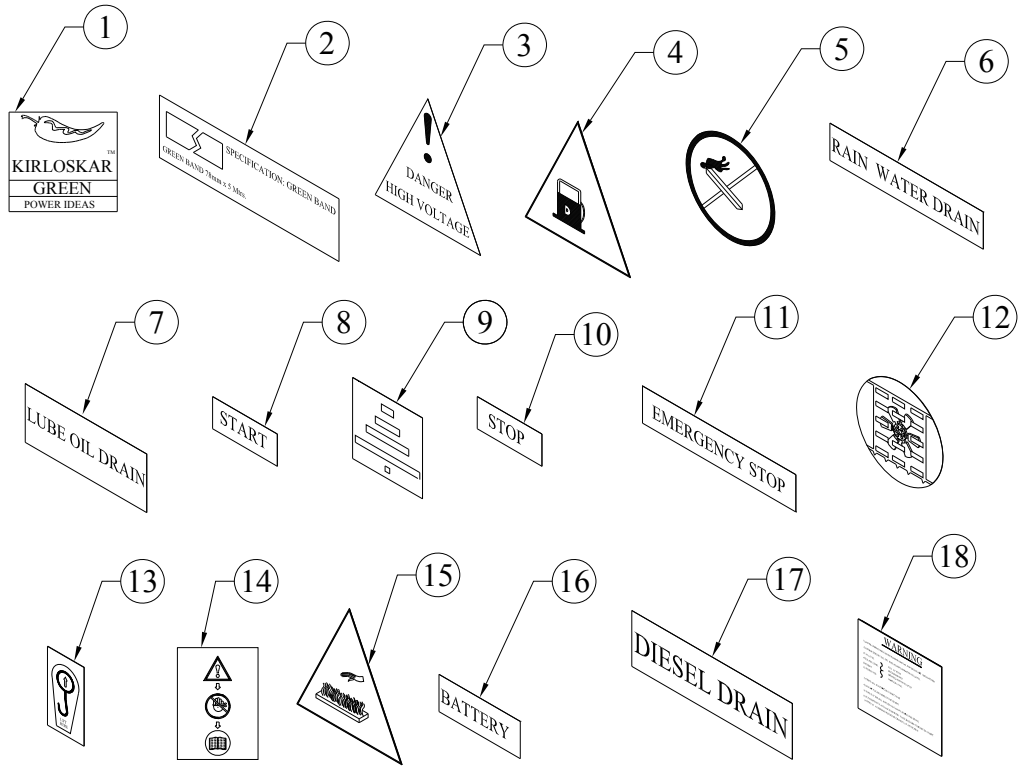

SR.NO.	PART NO.	DESCRIPTION	QTY.	REMARKS
15	38.065.66.0.00	STICKER FOR "HOT AIR"	1	
16	38.065.70.0.00	STICKER FOR "BATTERY"	1	
17	38.065.05.0.00	STICKER FOR "DIESEL DRAIN"	1	
18	38.065.71.0.00	WARNING STICKER	1	

TITLE: -SPEED ADJUSTMENT ARRANGEMENT FOR 2R, 3R 1040 ENGINE	**GROUP: -** 2H.938

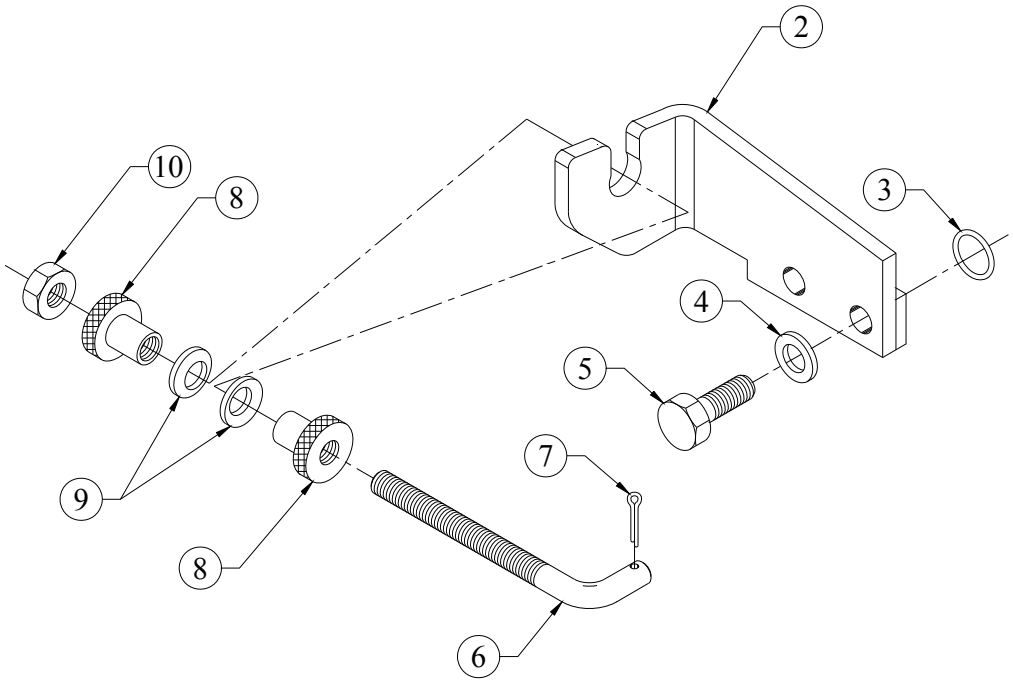

SR.NO.	PART NO.	DESCRIPTION	QTY.	REMARKS
*1	2H.938.10.0.00	ASSEMBLY FOR ENGINE SPEED ARRANGEMENT FOR 2R, 3R1040	1	CONSISTING OF SR. NO. 2 TO 10
2	4H.122.06.0.00	BRACKET FOR ENGINE SPEED ADJUSTMENT FOR 2R AND 3R1040	1	
3	03.036.01.0.00	O RING - DIPSTICK (2X5, 21515 OR 21511)	2	
4	50.506.06.000.	PLAIN MACHINED WASHER - M6	1	
5	50.003.06.015.	SET SCREW - M6X1X15 - 8.8	2	
6	4H.122.07.0.00	BAR FOR ENGINE SPEED ADJUSTMENT FOR 2R AND 3R 1040	1	
7	50.001.01.010.	SPLIT COTTER PIN - 1.6X10	1	
8	03.065.04.0.00	KNURLED NUT	2	
9	03.065.05.0.00	SPHERICAL WASHER	2	
10	50.008.06.000.	LOCK NUT - M6X1 - GR.8	1	

TITLE: - SPIN ON FUEL FILTER & ITS MTG ON HOUSING	**GROUP: -** 3H.241.2

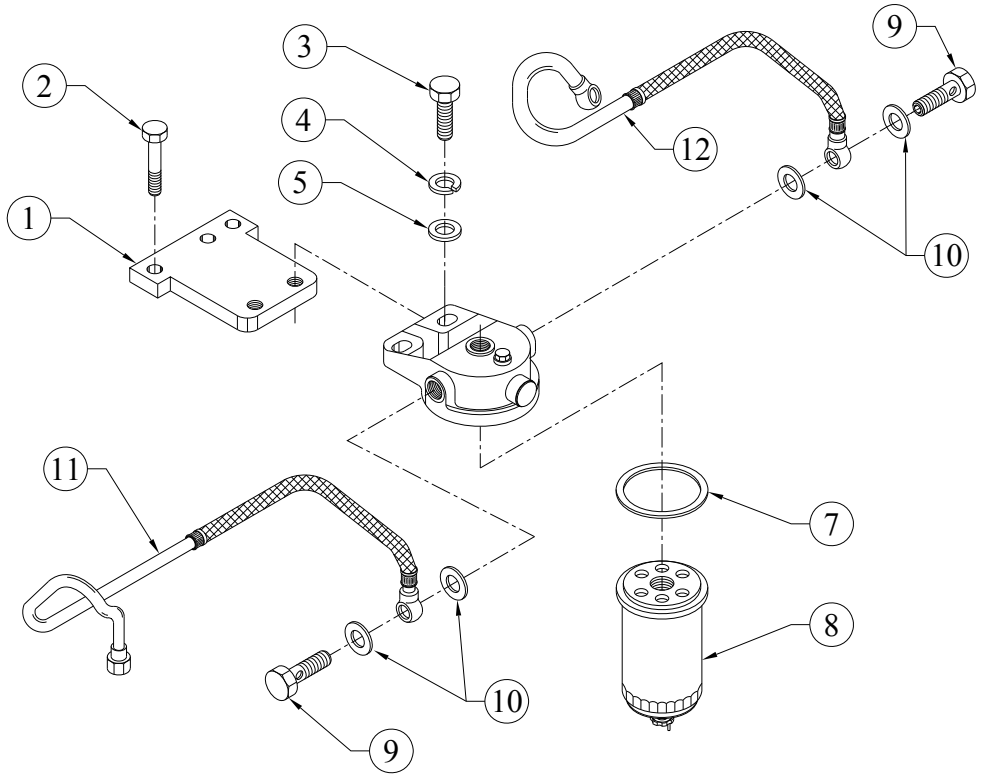

SR.NO.	PART NO.	DESCRIPTION	QTY.	REMARKS
1	03.113.02.0.00	PLATE FOR FUEL FILTER SUITABLE FOR 0.6 LTR SINGLE BOWL	1	
2	50.002.10.030.	SET BOLT - M10X1.5X30 - 8.8	2	
3	50.003.10.030.	SET SCREW - M10X1.5X30 - 8.8	2	
4	50.505.10.000.	SPRING WASHER - M10	2	
5	50.548.10.000.	SPECIAL PLAIN WASHER - M10	2	
*6	03.922.40.0.00	FUEL FILTER 0.6 ltrs. SINGLE BOWL SPIN ON (MICO NO. : F 002 H20 130)	1	CONSISTING OF SR. NO. 7, 8
7	03.922.41.0.00	SEALING RING FOR FUEL FILTER	1	
8	03.922.42.0.00	FUEL FILTER ELEMENT	1	
9	50.504.04.000.	BANJO BOLT - M14X1.5	4	
10	50.508.12.000.	COPPER WASHER (14X20)	8	
11	2H.116.01.0.00	FUEL PIPE (FEED PUMP TO FUEL FILTER)	1	
12	2H.116.02.0.00	FUEL PIPE (FUEL FILTER TO FIP)	1	

TITLE: - STAMFORD ALTERNATOR 23 KVA 3PH 220V, 0.8 P. F., 60 Hz, PI 144D, SAE 2 / 11.5"	**GROUP: -** 2H.459

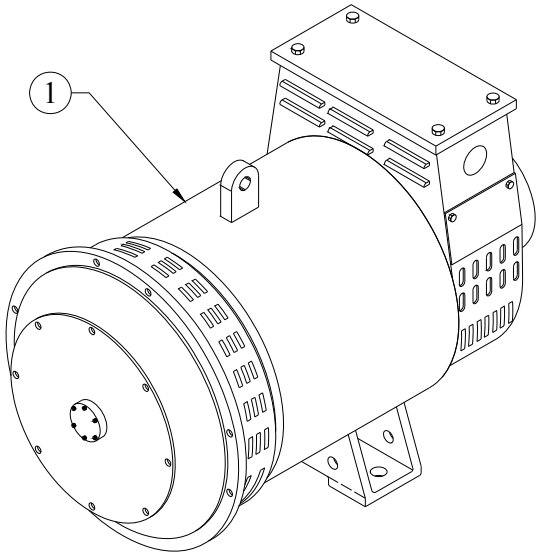

SR.NO.	PART NO.	DESCRIPTION	QTY.	REMARKS
1	2H.459.01.0.00	STAMFORD ALTERNATOR 23 KVA 3PH 220V,0.8P.F., 60 Hz, PI 144D,SAE 2 / 11.5"	1	

TITLE: - 23 KVA 220V 3PH. STD CONTROL PANEL WITH DSE 6120 MK-II UNIT & GEMS SENSOR FOR SILENT SET	**GROUP: -** 2H.973.3

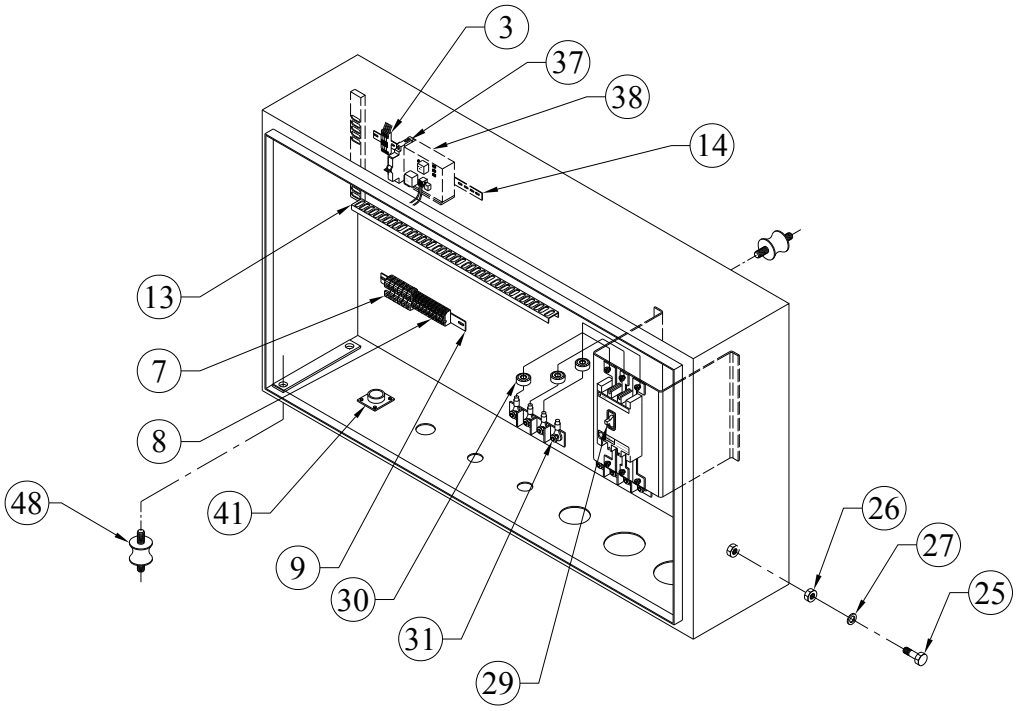

SR.NO.	PART NO.	DESCRIPTION	QTY.	REMARKS
*1	2H.973.20.0.PR	23 KVA 220V 3PH. STD CONTROL PANEL ASSEMBLY WITH DSE 6120 MK-II UNIT & GEMS SENSOR FOR SILENT SET	1	CONSISTING OF SR. NO. 2, 11, 12, 24, 28, 33 TO 36
*2	2H.892.50.0.00	TERMINAL FUSE, PVC CHANEL, TERMINAL STRIP ASSEMBLY FOR STD. PANEL	1	CONSISTING OF SR. NO. 3 TO 10
3	4H.865.08.0.00	FUSE HOLDER WITH FUSE BLOWN INDICATOR PHONIX MAKE (220/230V)	3	
*4	4H.865.09.0.00	GLASS FUSE 2AMP. 20 MM RELAINCE/ EI MAKE	3	NOT ILLUSTRATED
*5	2H.892.09.0.00	FUSE BLOWN INDICATOR 12 /24 VDC PHONIX MAKE BLACK COLOUR R	1	NOT ILLUSTRATED
*6	3H.870.08.0.00	GLASS FUSE 20 MM LENGTH 4 AMP	1	NOT ILLUSTRATED

TITLE: - 23 KVA 220V 3PH. STD CONTROL PANEL WITH DSE 6120 MK-II UNIT & GEMS SENSOR FOR SILENT SET	**GROUP: -** 2H.973.3

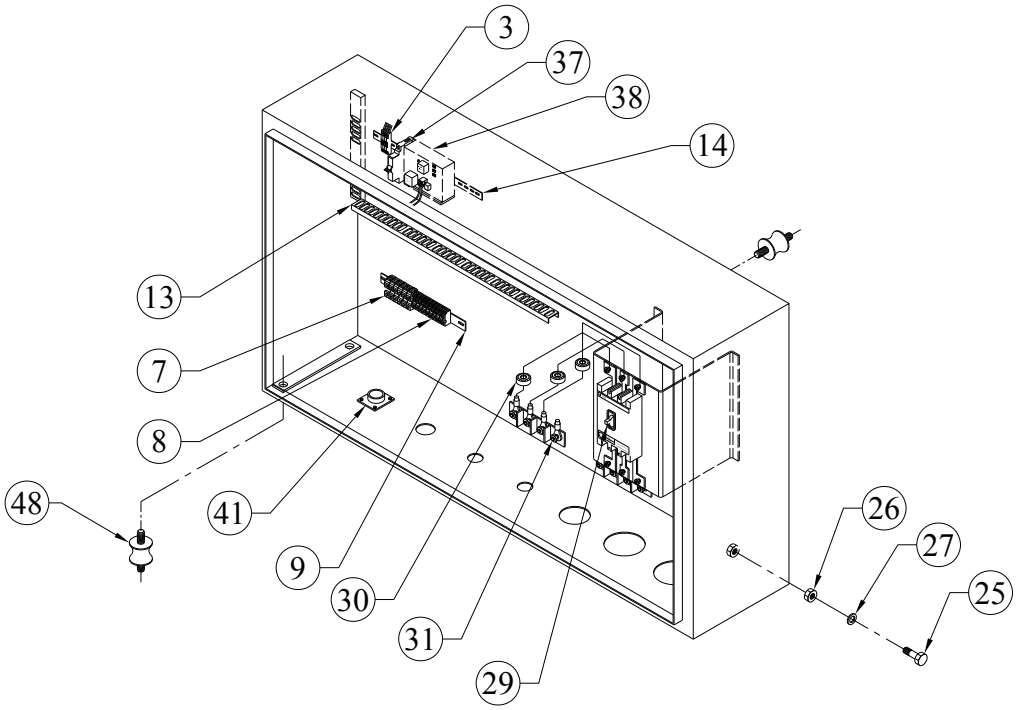

SR.NO.	PART NO.	DESCRIPTION	QTY.	REMARKS
7	4H.865.22.0.00	CONTROL TERMINAL 6 SQ.MM,600V,50A,TYPE-CTS6U, CONNECTWELL MAKE	4	
8	38.346.02.0.00	CONTROL TERMINAL 4 SQ.MM.,600V,25A,TYPE-CTS4UN,CONNECTWELL MAKE	13	
9	KV8.853.07.0.00	CONNECTWELL MAKE END CLAMP (AS REQUIRED)	6	
*10	2H.892.12.0.00	CONNECTWELL MAKE END PLATES FOR 4 SQ.MM TERMINAL STRIPS	2	NOT ILLUSTRATED
*11	2H.971.22.0.PR	ENGINE CONTROL DIG WITH DSE 6120MKII UNIT	1	NOT ILLUSTRATED
*12	2H.892.60.0.00	MISCELLANEOUS PARTS ASSEMBLY FOR STD.CONTROL PANEL	1	CONSISTING OF SR. NO. 13 TO 23
13	2H.892.13.0.00	PVC CHNNEL SALZER MAKE 25 X 25 MM(LENGTH AS REQUIRED)	1	

TITLE: - 23 KVA 220V 3PH. STD CONTROL PANEL WITH DSE 6120 MK-II UNIT & GEMS SENSOR FOR SILENT SET	**GROUP: -** 2H.973.3

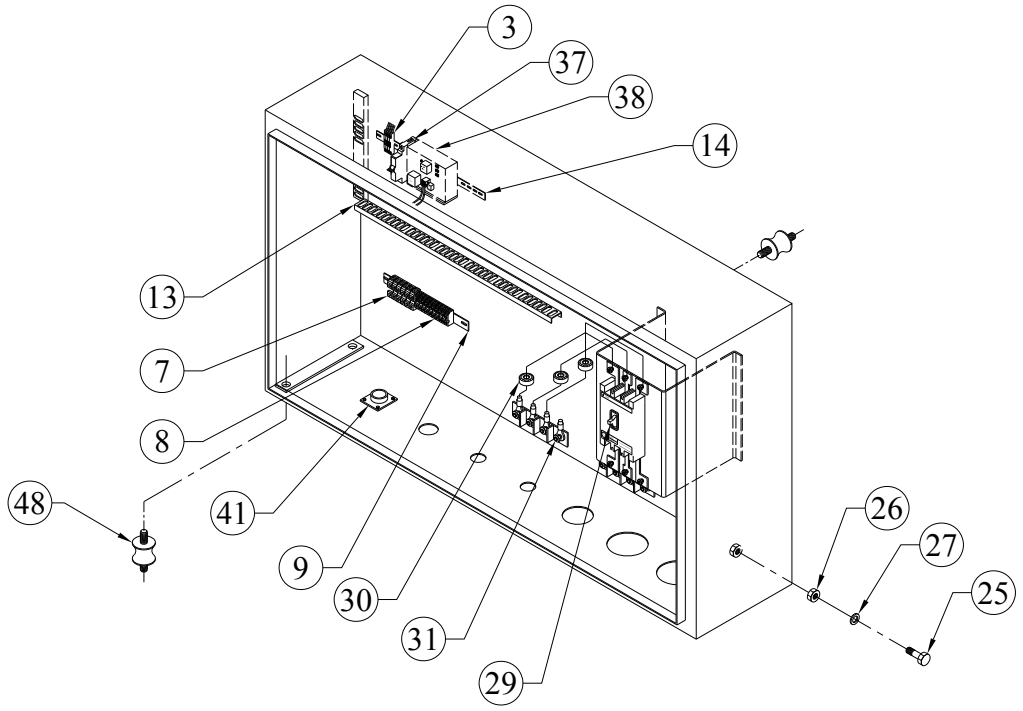

SR.NO.	PART NO.	DESCRIPTION	QTY.	REMARKS
14	4H.971.14.0.00	DIN RAIL WITH GREEN PASSIVATION(LENGTH AS REQUIRED)	0.5	
*15	4H.865.19.0.00	SPIRAL FOR WIRE BUNCH	1	NOT ILLUSTRATED
*16	3H.905.06.0.00	TIE WRAP 100 MM LENGTH (QTY. AS REQUIRED)	50	NOT ILLUSTRATED
*17	2H.892.07.0.00	CONTROL PANEL FRONT DOOR STICKER (40 x 10) & LETTER HIGHT 4 MMANODIZED WHITE BACKGROUND BLACK LETTER)	1	NOT ILLUSTRATED
*18	2H.892.06.0.00	LEGENDS FOR CONTROL PANEL INSIDE PARTS(20 X 8) LETTER HIGHT 3MM,Polycarbonate,sign written)	1	NOT ILLUSTRATED
*19	2H.892.08.0.00	CONTROL PANEL SERIAL NAME PLATE	1	NOT ILLUSTRATED
*20	2H.892.14.0.00	PRINTED FERRULE WHITE SLIVE BLACK LETTER 1 SETFOR CONTROL PANEL	1	NOT ILLUSTRATED

TITLE: - 23 KVA 220V 3PH. STD CONTROL PANEL WITH DSE 6120 MK-II UNIT & GEMS SENSOR FOR SILENT SET	**GROUP: -** 2H.973.3

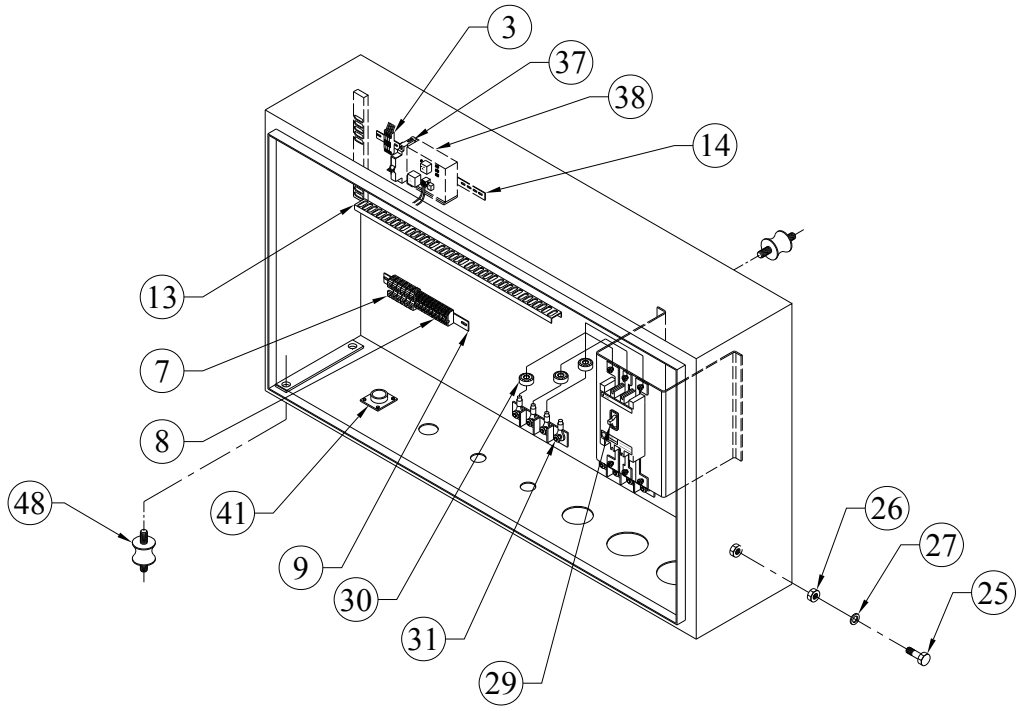

SR.NO.	PART NO.	DESCRIPTION	QTY.	REMARKS
*21	2H.892.15.0.00	ANODIZED PLATE /LAMINATED STIKER SIZE. 280 X150 AS PER BOM ELECT. DWG.	1	NOT ILLUSTRATED
*22	4H.971.09.0.00	RUBBER GASKET(SELF ADESIVE 20X5 MM) FOR CONTROL PANEL DOOR & GLAND PLATE	4	NOT ILLUSTRATED
*23	2H.892.31.0.00	RUBBER GROMET FOR EVERY CONTROL PANELBLANCK HOLE	1	NOT ILLUSTRATED
*24	2H.892.70.0.00	EARTHING ASSEMBLY	1	CONSISTING OF SR. NO. 25 TO 27
25	4H.971.18.0.00	SET BOLT M8 (ROLLED BRASS) FOR PANEL EARTHING	2	
26	4H.971.19.0.00	M8 NUT ROLLED BRASS FOR PANEL EARTHING SHANTI PROJECT	4	
27	4H.971.23.0.00	M8 BRASS WASHER FOR PANEL EARTHING	4	

TITLE: - 23 KVA 220V 3PH. STD CONTROL PANEL WITH DSE 6120 MK-II UNIT & GEMS SENSOR FOR SILENT SET	**GROUP: -** 2H.973.3

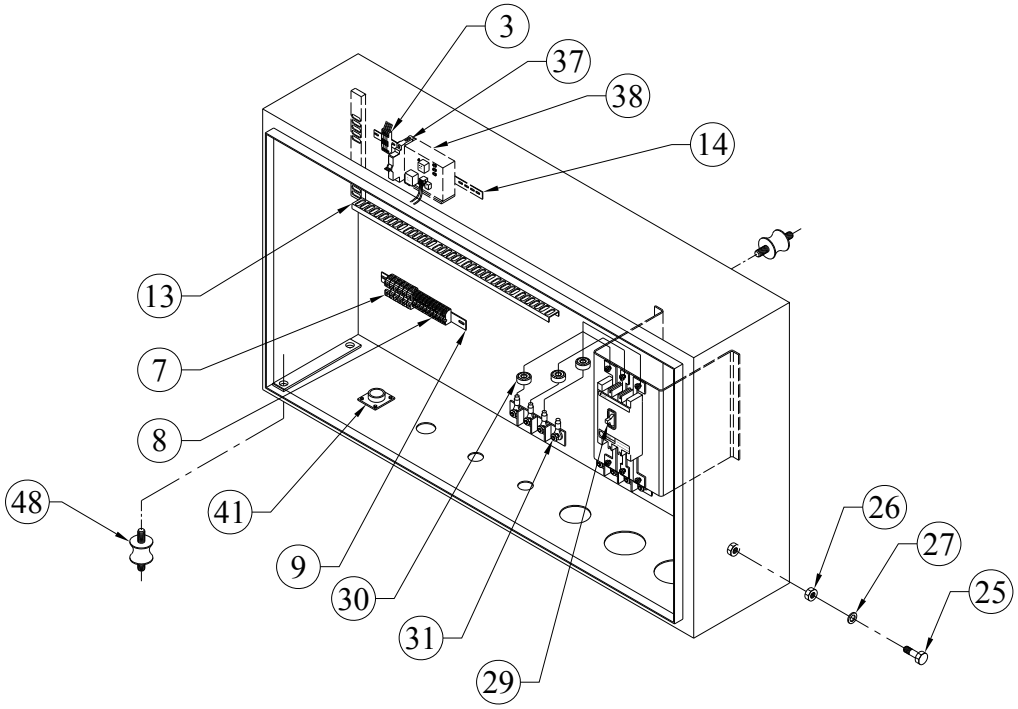

SR.NO.	PART NO.	DESCRIPTION	QTY.	REMARKS
*28	2H.973.40.0.00	MCCB, CT, POWER TERMINAL, ASSEMBLY FOR 80 AMP.	1	CONSISTING OF SR. NO. 29 TO 32
29	2H.973.11.0.00	SCHNIEDER MAKE MCCB 3POLE 80A TYPE- LV510306N (SET IR POINT AT .85 (72 AMP).)	1	
30	4H.1268.05.0.00	CURRENT TRANSFARMOR 100/5, 5 VA (NEWTEK MAKE)	3	
31	4H.865.23.0.00	POWER TERMINAL BOARD 125 AMP. EVEREST MAKE 4 WAY 8 MM STUD	1	
*32	3H.894.01.0.00	NEUTRAL LINK 40 AMP.	1	NOT ILUSTRATED
33	2H.971.01.0.00	CONTROL PANEL FAB. DWG. WITH KG6122 ENGINE CONTROLLER FOR 2R1040 GENSET(SILENT SET)	1	
34	6H.880.32.0.PR	ON/FF SELECTOR SW.(WITH NO ELEMENT)TEKINC MAKE METALLIC SERIES 2AS2-2P.	1	

TITLE: - 23 KVA 220V 3PH. STD CONTROL PANEL WITH DSE 6120 MK-II UNIT & GEMS SENSOR FOR SILENT SET	**GROUP: -** 2H.973.3

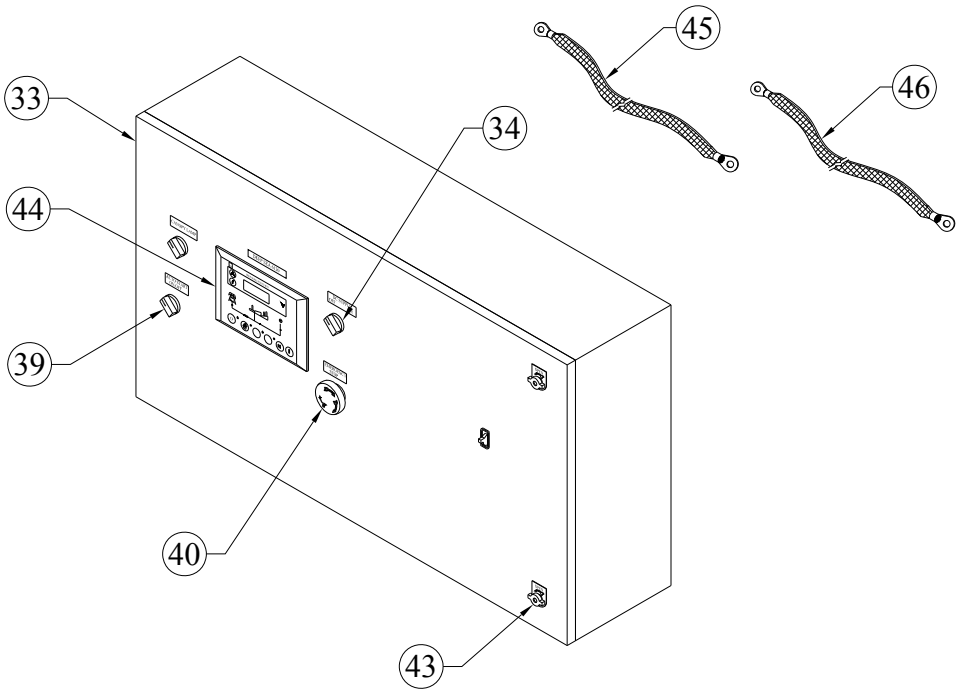

SR.NO.	PART NO.	DESCRIPTION	QTY.	REMARKS
*35	4H.971.16.0.00	POWER MATE CONNECTOR 4 PIN (MALE CONNECTOR FEMALE PINS)	1	NOT ILLUSTRATED
*36	2H.970.40.0.00	COMPONANT ASSEMBLE (MCB, PB, SELECTOR SW.) FOR STD. PANEL	1	CONSISTING OF SR. NO. 37 TO 43
37	3H.864.04.0.00	MCB 32A SP MERLINGERIN MAKE(C60H1P32AC)	1	
38	4H.865.27.0.00	RELAY BOARD 2 AND 1/2 CHANEL 12V DC	1	
39	6H.880.32.0.PR	ON/FF SELECTOR SW.(WITH NO ELEMENT)TEKINC MAKE METALLIC SERIES 2AS2-2P.	1	
40	6H.880.13.0.00	EMERGENCY STOP PB(WITH NC ELEMENT)SCHNEIDER/TELEMECA NIQUE MAKE HORMONY RANGE RELEASE MUSHROOM TYPE XB5A542N	1	

TITLE: - 23 KVA 220V 3PH. STD CONTROL PANEL WITH DSE 6120 MK-II UNIT & GEMS SENSOR FOR SILENT SET	**GROUP: -** 2H.973.3

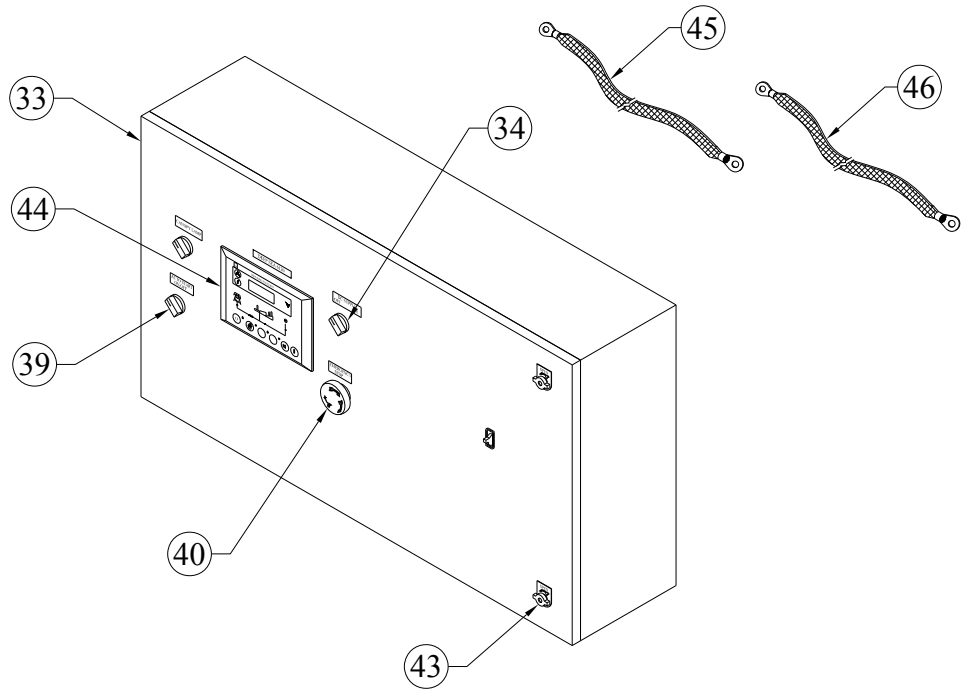

SR.NO.	PART NO.	DESCRIPTION	QTY.	REMARKS
41	2H.875.14.0.00	ALLIED/AMFINOL MAKE 10 PIN CONNECTOR TYPE MS3102R-18-1P	1	
*42	04.932.04.0.00	10 PIN CONNECTOR ALLIDE /AMFINOL MAKE TYPE MS3106F-18-1S	1	NOT ILLUSTRATED
43	6H.880.16.0.00	DOOR LOCK DARSHANA MAKE ,TYPE-DM3WL-,DIE CAST ,STANDARD GRIP 30MM	2	
44	6H.877.11.0.PR	GENERATOR CONTROL UNIT MODEL DSE 6120 MK-II	1	
45	2H.868.02.0.00	EARTHING CABLE (BRADED) FOR GENSET 4MM DIA. WITH SUITABLE LUG. ALT. TO BASE PLATE LENGTH 350MM FOR SAUDI 23KVA	1	
46	2H.903.03.0.00	EARTHING CABLE - PANEL TO BASE PLATE(BRADED) 4 SQ.MM.LENGTH 750MM (LUG M10 ON ONE SIDE & M8 ON OTHER SIDE) FOR SAUDI	1	

TITLE: - 23 KVA 220V 3PH. STD CONTROL PANEL WITH DSE 6120 MK-II UNIT & GEMS SENSOR FOR SILENT SET	**GROUP: -** 2H.973.3

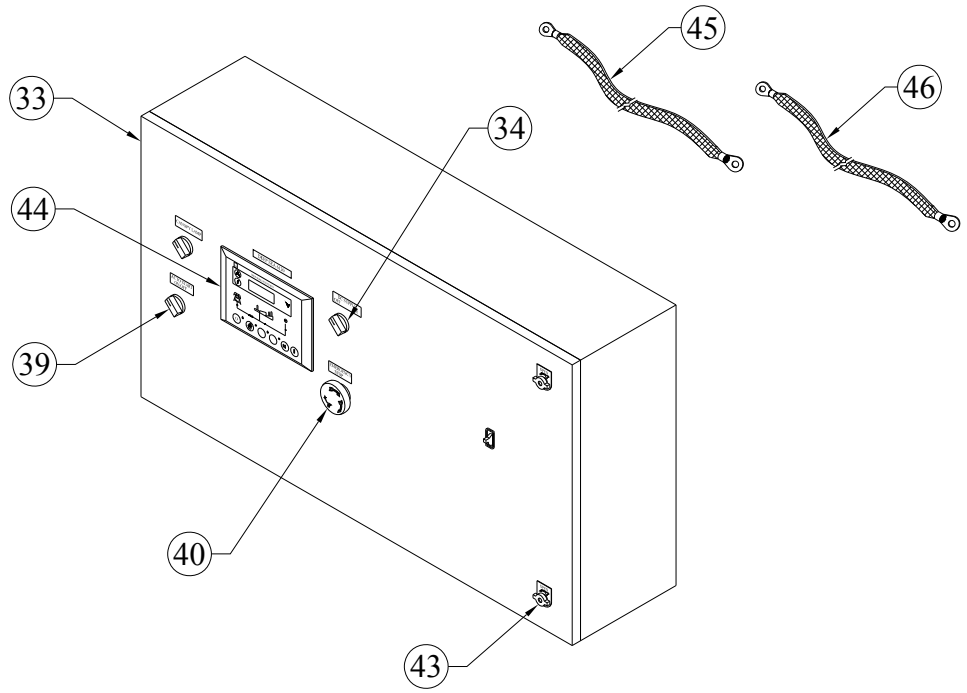

SR.NO.	PART NO.	DESCRIPTION	QTY.	REMARKS
*47	2H.970.16.0.PR	DSE 6120MKII CONTROLLER PROGRAM FOR 23 KVA 220 V60 HZ 3 PH	1	NOT ILLUSTRATED
48	44.035.05.0.00	ANTIVIBRATION MOUNTING	6	

TITLE: - STICKER FOR "KG23WS"	**GROUP: -** 02.710.44

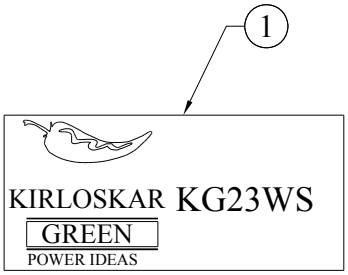

SR.NO.	PART NO.	DESCRIPTION	QTY.	REMARKS
1	02.710.44.0.00	STICKER FOR "KG23WS"	1	

TITLE:- STOP SOLENOID (12V,ENERGIES TO STOP) SINGLE COIL	**GROUP:-** 4H.150.2

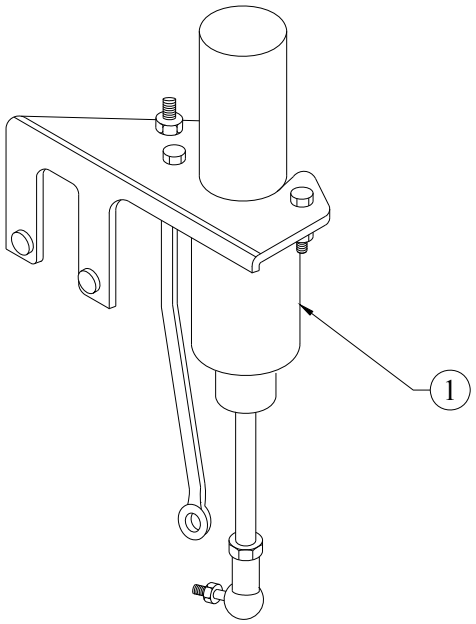

SR.NO.	PART NO.	DESCRIPTION	QTY.	REMARKS
1	4H.150.30.0.00	STOP SOLENOID ASSLY FOR 12 VDC FOR MICO PUMP (SINGLE COIL)	1	

TITLE: - SUCTION TUBE	**GROUP: -** 2H.071

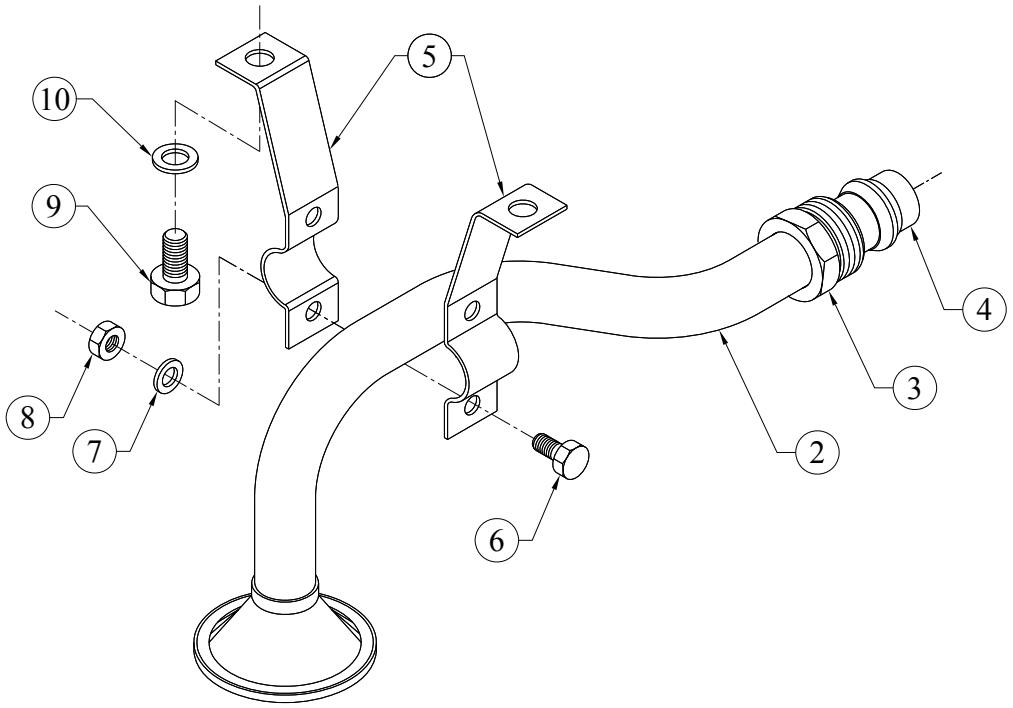

SR.NO.	PART NO.	DESCRIPTION	QTY.	REMARKS
*1	2H.071.40.0.00	ASSEMBLY OF SUCTION TUBE (FOR SHEET METAL SUMP)	1	CONSISTING OF SR.NO. 2 TO 10
2	2H.071.30.0.00	SUB ASSEMBLY OF SUCTION TUBE	1	
3	03.011.02.0.00	UNION SCREW	1	
4	03.011.03.0.00	DOUBLE CONE RING	1	
5	03.011.04.0.00	CLIP FOR PIPE	1	
6	50.003.06.012.	SET SCREW - M6X1X12 - 8.8	2	
7	50.506.06.000.	PLAIN MACHINED WASHER - M6	4	
8	50.006.06.000.	NUT - M6X1 - GR.8	2	
9	50.003.08.016.	SET SCREW - M8X1.25X16 - 8.8	2	
10	50.506.08.000.	PLAIN MACHINED WASHER - M8	2	

TITLE: -SUMP DRAIN ARRANGEMENT (WITHOUT BUSH)	**GROUP: -**34.098.1

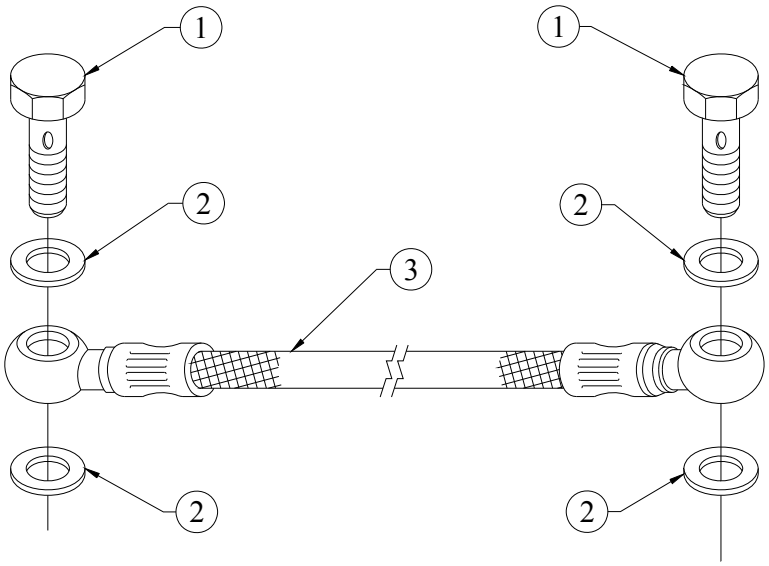

SR.NO.	PART NO.	DESCRIPTION	QTY.	REMARKS
1	50.504.06.000.	BANJO BOLT - M18X1.5	2	
2	50.508.17.000.	COPPER WASHER (18X24)	4	
3	42.107.01.0.00	SUMP DRAIN PIPE (700 MM) BENJO ON BOTH SIDE	1	

TITLE: - SUPRABHA BAG DIMN LxWxH (2200 x 1200 x 1350)	**GROUP: -** 2H.450.23

SR.NO.	PART NO.	DESCRIPTION	QTY.	REMARKS
*1	2H.450.23.0.00	SUPRABHA BAG DIMN LxWxH (2200 x 1200 x 1350)	1	NOT ILLUSTRATED NOT SUPPLIED LOOSE

TITLE: - THERMOSTAT AND MOUNTING (M14 ADAPATOR ON BOTH END)	**GROUP: -** 3H.061.1

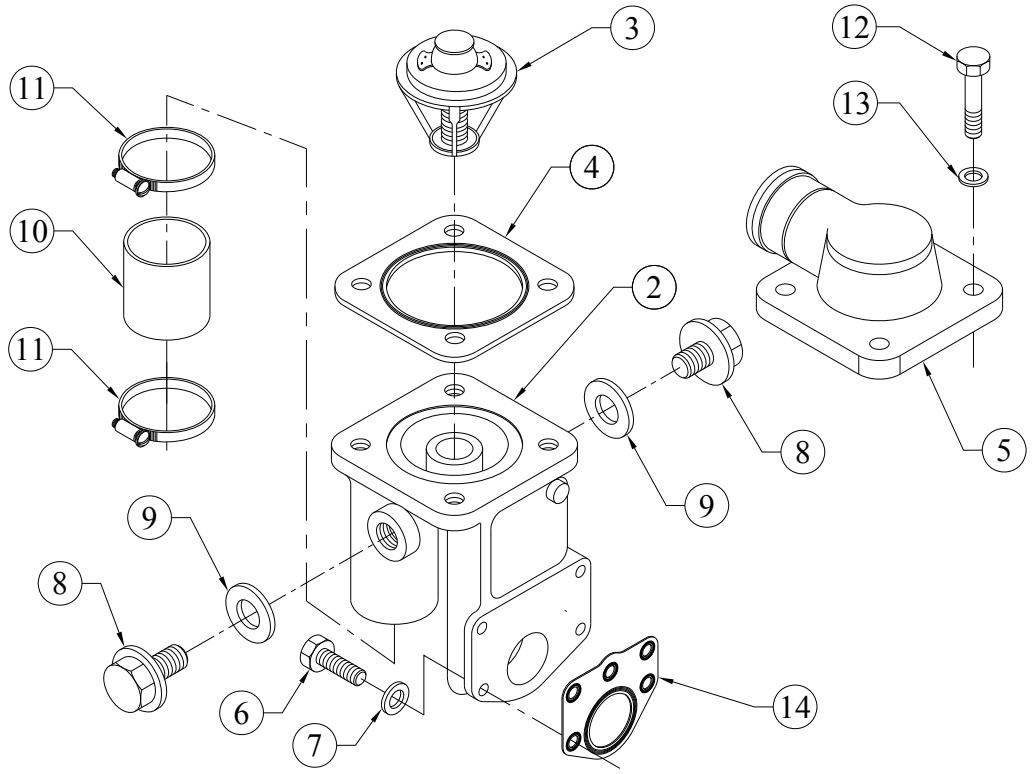

SR.NO.	PART NO.	DESCRIPTION	QTY.	REMARKS
*1	3H.061.40.0.00	THERMOSTAT AND MOUNTING (M14 ADAPATOR ON BOTH END)	1	CONSISTING OF SR. NO. 2 TO 11
2	4H.053.01.0.00	THERMOSTAT HOUSING M14 TAP BOTH SIDES	1	
3	39.040.09.0.00	THERMOSTAT ELEMENT (74 DEG) - WTIL NO.DEV358	1	
4	4H.053.08.0.00	JOINT FOR THERMOSTAT COVER (METTALIC)	1	
5	47.025.03.0.00	THERMOSTAT COVER- HORIZONTAL OUTLET POINTING TOWARDS RIGHTS SIDE VIEWING TOWARDS RAIDATOR	1	
6	50.003.08.025.	SET SCREW - M8X1.25X25 - 8.8	4	
7	50.506.08.000.	PLAIN MACHINED WASHER - M8	4	
8	50.602.14.000.	PLUG (M14X1.5)	2	
9	50.508.11.000.	COPPER WASHER (14X18)	2	
10	4H.023.02.0.00	THERMOSTAT BYPASS HOSE	1	

TITLE: - THERMOSTAT AND MOUNTING (M14 ADAPATOR ON BOTH END)	**GROUP: -** 3H.061.1

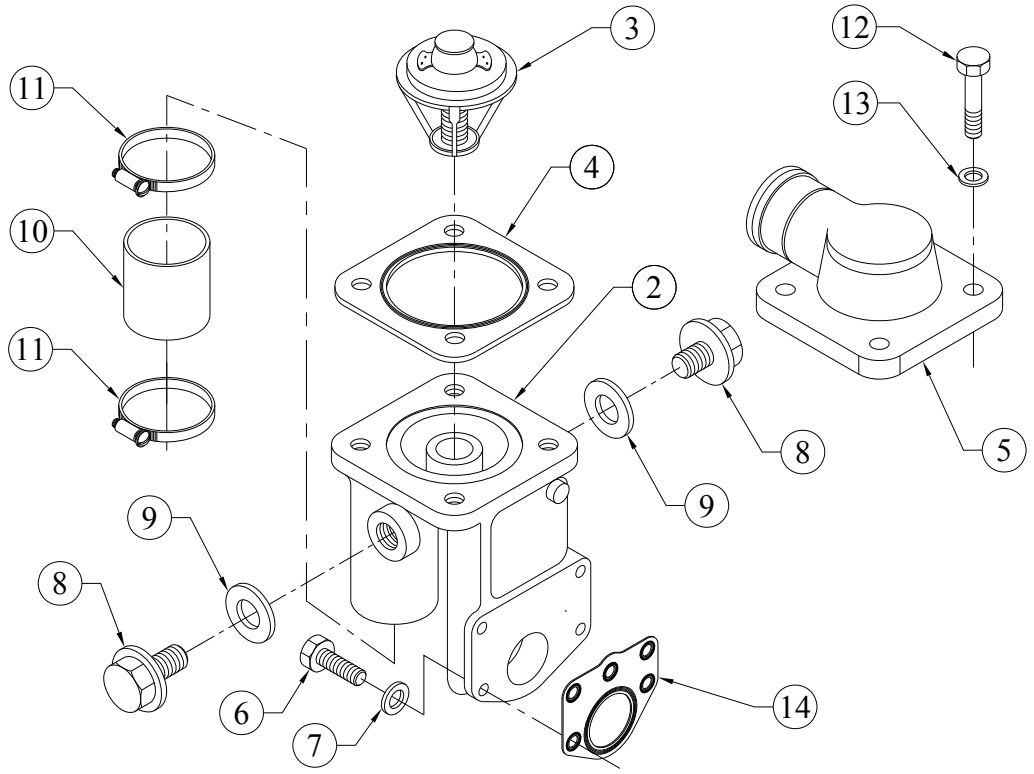

SR.NO.	PART NO.	DESCRIPTION	QTY.	REMARKS
11	2H.112.02.0.00	WORM DRIVE CLAMP (JUPITOR JW7B13, 29 TO 45 DIA)	2	
12	50.002.08.040.	SET BOLT – M8X1.25X40 – 8.8	4	
13	50.506.08.000.	PLAIN MACHINED WASHER – M8	4	
14	4H.053.11.0.00	JOINT FOR THERMOSTAT HOUSING	1	

TITLE: - TIE WRAP 200 MM LENGTH	**GROUP: -** 3H.905.07

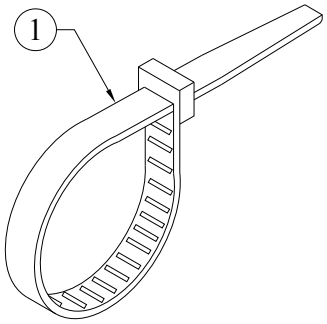

SR.NO.	PART NO.	DESCRIPTION	QTY.	REMARKS
1	3H.905.07.0.00	TIE WRAP 200 MM LENGTH	15	

TITLE: -VALVE ROCKER ASSEMBLY	**GROUP: -** 2H.022

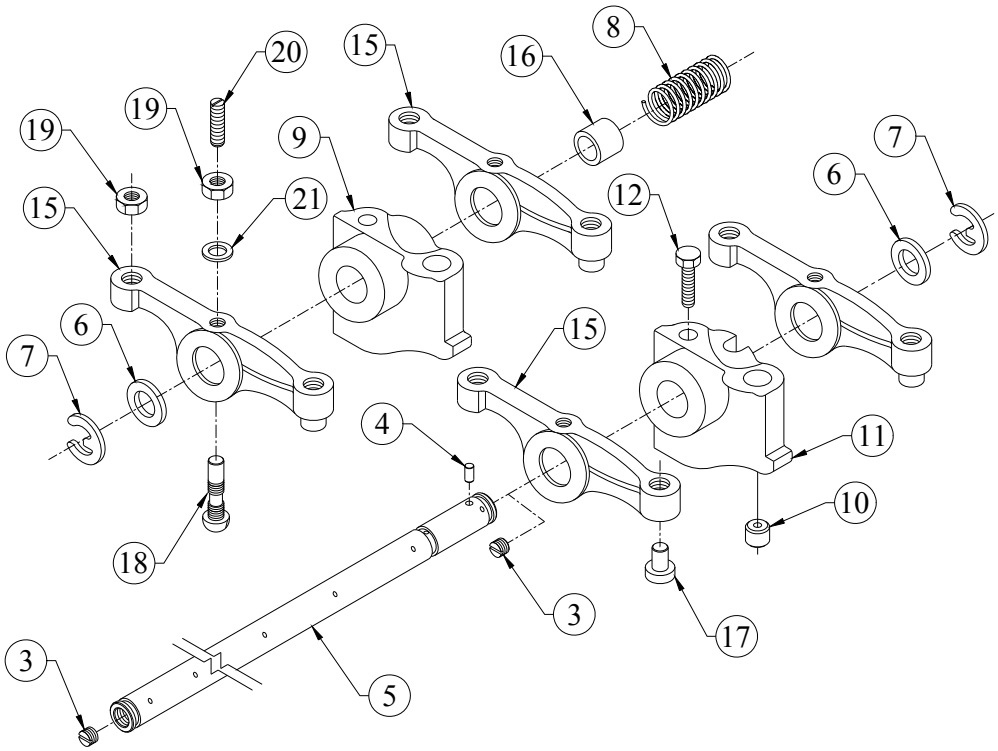

SR.NO.	PART NO.	DESCRIPTION	QTY.	REMARKS
*1	P3.010.10.0.00	VALVE ROCKER ASSLY. (COMPLETE)	1	CONSISTING OF SR. NO. 2, 6 TO 13 & 21
*2	2H.022.20.0.00	ROCKER SHAFT ASSEMBLY	1	CONSISTING OF SR. NO. 3 TO 5
3	50.022.12.010.	SOCKET HEAD GRUB SCREW - M12X10	2	
4	4H.008.04.0.00	GROOVED SOCKET PIN	1	
5	P3.010.01.0.00	ROCKER SHAFT	1	
6	2H.022.04.0.00	WASHER (FOR ROCKER ARM)	2	
7	50.513.15.000.	E TYPE CIRCLIP-EXTERNAL (15 DIA.)	2	
8	2H.022.03.0.00	SPRING FOR ROCKER SHAFT.	1	
9	2H.022.01.0.00	ROCKER SUPPORT (FINISH)(FWE)	1	
10	2H.022.06.0.00	OIL METERING ORIFICE	1	
11	2H.022.02.0.00	ROCKER SUPPORT (FINISH)	1	
12	50.003.08.030.	SET SCREW - M8X1.25X30 - 8.8	2	
*13	02.024.20.0.00	VALVE ROCKER ASSLY	4	CONSISTING OF SR. NO. 14 & 17 TO 20

TITLE: -VALVE ROCKER ASSEMBLY	**GROUP: -** 2H.022

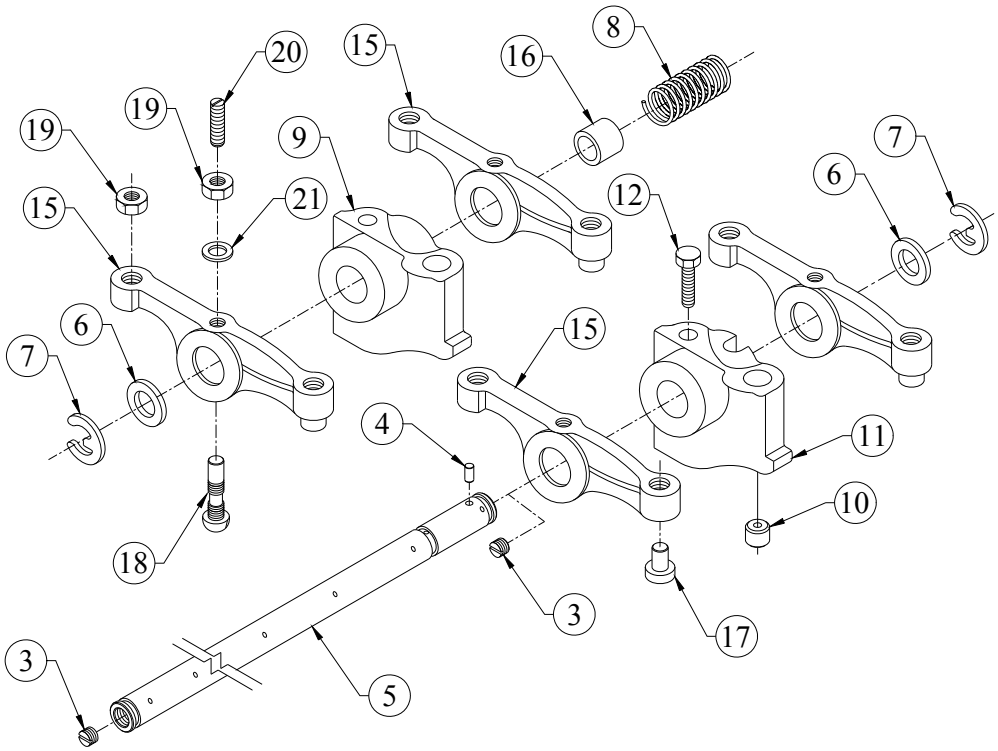

SR.NO.	PART NO.	DESCRIPTION	QTY.	REMARKS
*14	02.024.23.0.00	ROCKER ARM SUB ASSEMBLY (WITH VR BUSH)	1	CONSISTING OF SR. NO. 14 & 17 TO 20 NOT SUPPLIED LOOSE
15	02.024.11.0.00	ROCKER ARM	1	NOT SUPPLIED LOOSE
16	02.024.12.9.00	V.R. BUSH (SEMI FINISH)	1	NOT SUPPLIED LOOSE
17	02.024.15.0.00	V.R.TOE	1	NOT SUPPLIED LOOSE
18	02.024.13.0.00	ROCKER-ARM ADJ. SCREW	1	
19	02.024.27.0.00	NUT FOR ROCKER ADJ.SCREW	1	
20	02.024.14.0.00	OIL METERING SCREW	1	
21	P2.010.03.0.00	WASHER FOR ROCKER ARM	4	

TITLE: - WATER INLET AND OUTLET CONNECTION FOR RADIATOR(STAGE 1)	**GROUP: -** 3H.029.1

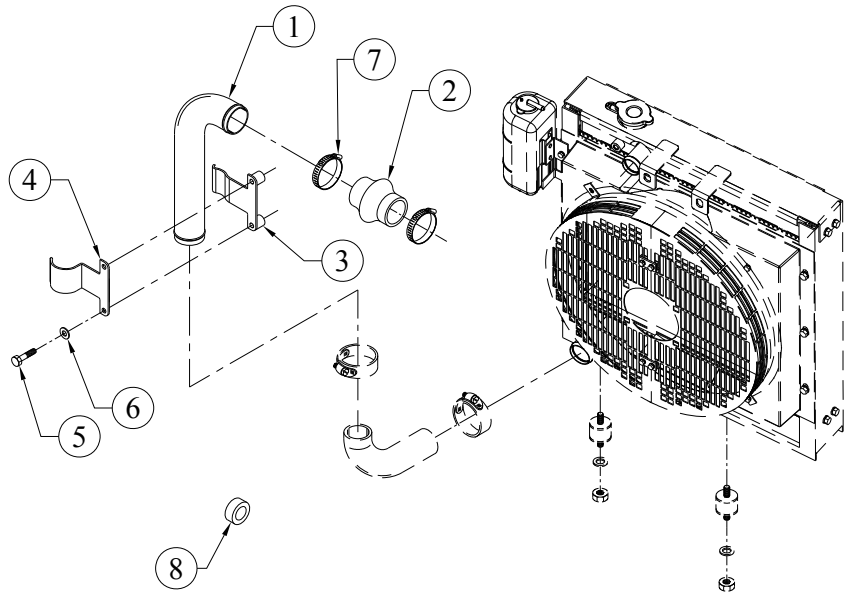

SR.NO.	PART NO.	DESCRIPTION	QTY.	REMARKS
1	3H.029.02.0.00	PIPE (RADIATOR TO PUMP INLET)	1	
2	4H.073.02.0.00	HOSE (PIPE TO WATER PUMP) (45X45X80L)	1	
3	3H.029.03.0.00	LOWER CLAMP(FOR RADIATOR PIPE)	1	
4	3H.029.04.0.00	TOP CLAMP(FOR RADIATOR PIPE)	1	
5	50.002.08.045.	SET BOLT - M8X1.25X45 - 8.8	2	
6	50.506.08.000.	PLAIN MACHINED WASHER - M8	2	
7	4H.1712.24.0.00	HOSE T-BOLT CLAMP (DIA. 55-65)	2	
8	03.149.02.0.00	SPACER(11 X 20 X 6.5 L)	1	

TITLE: - WATER PUMP (282.5 CRS)	**GROUP: -** 4H.052

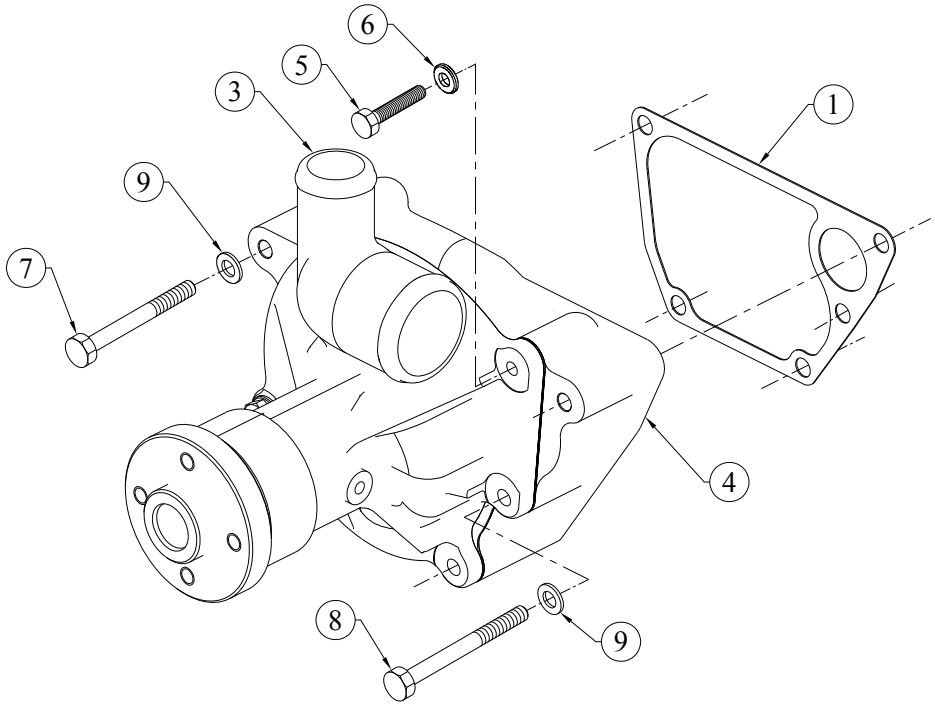

SR.NO.	PART NO.	DESCRIPTION	QTY.	REMARKS
1	4H.052.12.0.00	JOINT FOR DELIVERY VOLUTE	1	
*2	4H.052.40.0.00	WATER PUMP SUB ASSEMBLY	1	CONSISTING OF SR. NO. 3
3	4H.052.20.0.00	W.P.ASSLY.WITH DEL.VOLUTE (282.5 CRS) (TBK MAKE)	1	CONSISTING OF SR. NO. 4 TO 6
4	4H.052.70.0.00	SUB ASSEMBLY OF DILEVERY VOLUTE	1	
5	50.003.08.025.	SET SCREW - M8X1.25X25 - 8.8	3	
6	10.020.03.0.00	HARD WASHER (F)	3	
7	50.002.10.060.	SET BOLT - M10X1.5X60 - 8.8	3	
8	50.002.10.070.	SET BOLT - M10X1.5X70 - 8.8	2	
9	50.506.10.000.	PLAIN MACHINED WASHER - M10	5	

TITLE: - WATER PUMP PULLEY FOR POLY V BELT 6PK (2R TO 4RTA)	**GROUP: -** 4H.1483

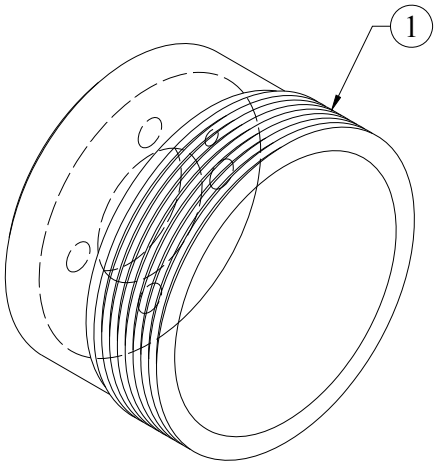

SR.NO.	PART NO.	DESCRIPTION	QTY.	REMARKS
1	4H.1483.11.0.00	WATER PUMP PULLEY FOR 100 P.C.D	1	

TITLE: - WIRING HARNESS ENGINE TO PANEL WITH DSE 6120 MKII UNIT FOR SILENT SET	**GROUP: -** 2H.953.2

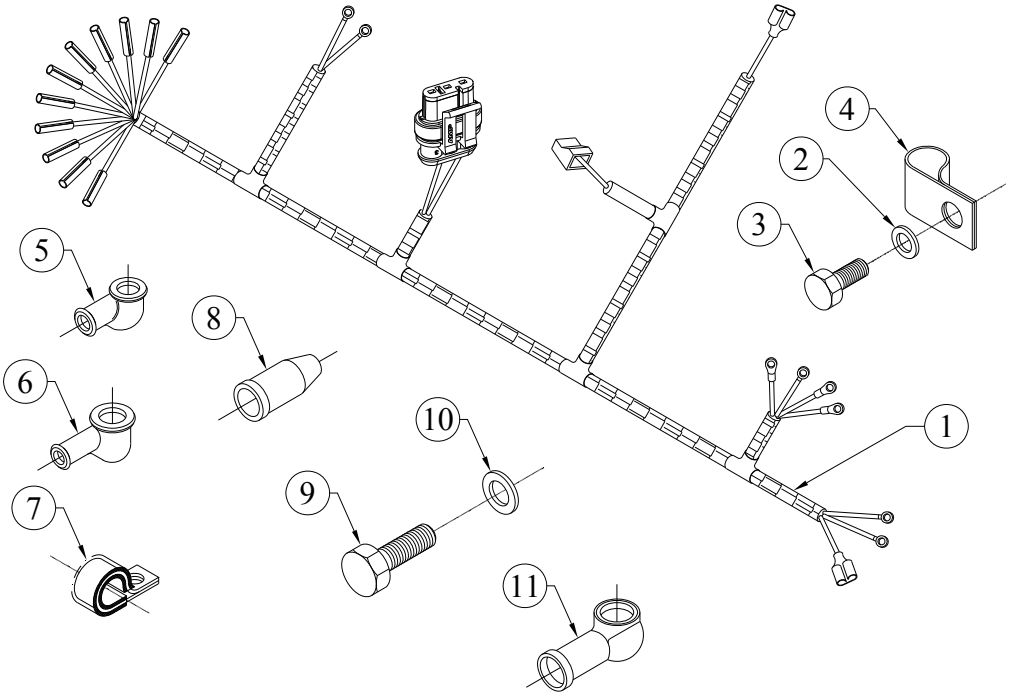

SR.NO.	PART NO.	DESCRIPTION	QTY.	REMARKS
1	2H.953.20.0.PR	WIRING HARNESS ASSEMBLY ENGINE TO PANEL WITH DSE 6120 MK-II UNIT FOR SILENT SET	1	
2	50.506.08.000.	PLAIN MACHINED WASHER - M8	2	
3	50.003.08.016.	SET SCREW - M8X1.25X16 - 8.8	2	
4	34.151.03.0.00	CLIP FOR FLEXIBLE PIPE WITH SLEEVE	2	
5	3H.905.01.0.00	RUBBER SLEEVE 16 DIA	3	
6	22.118.01.0.00	RUBBER SLEEVE(12DIA)	2	
7	3H.905.02.0.00	CLIP 25 DIA FOR FLEXIBLE PIPE	1	
8	3H.905.05.0.00	RUBBER SLEEVE FOR TEMP.SWITCH / SENSOR	1	
9	50.003.12.020.	SET SCREW - M12X1.75X20 - 8.8	1	
10	50.548.12.000.	SPL. PLAIN WASHER - M12	1	
11	3H.905.03.0.00	RUBBER SLIVE 27 DIA	2	

TITLE: - WIRING HARNESS FOR CANOPY LAMP & EMERGANCY P.B. FOR SHANTI PROJECT (10, 15, 20, 25 KVA)	**GROUP: -** 38.353.1

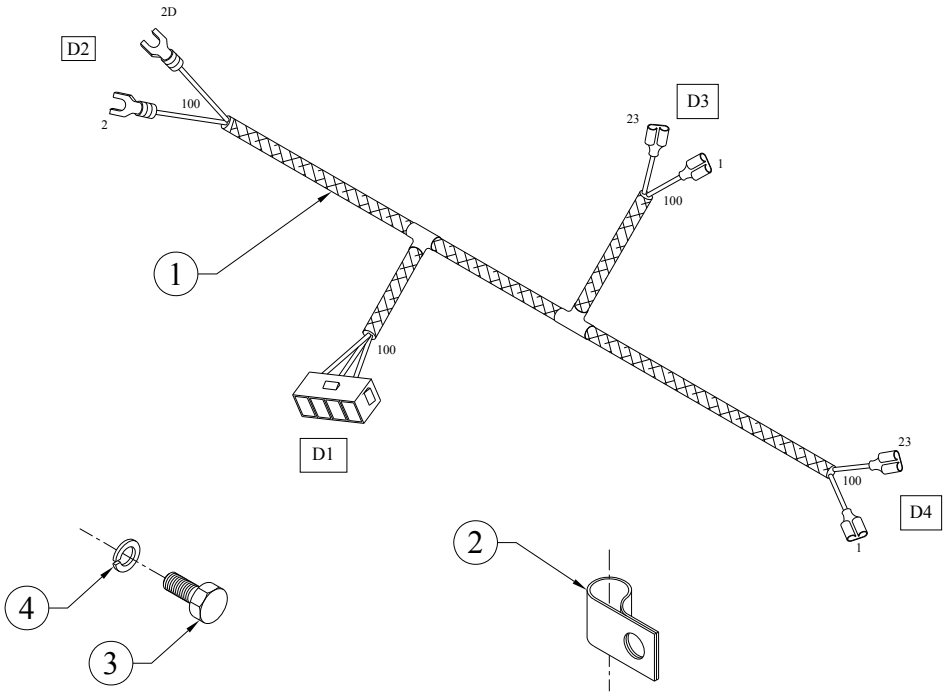

SR.NO.	PART NO.	DESCRIPTION	QTY.	REMARKS
1	38.353.02.0.00	WIRING HARNESS FOR CANOPY LAMP & EMERGANCY P.B.	1	
2	34.151.03.0.00	CLIP FOR FLEXIBLE PIPE WITH SLEEVE	7	
3	50.003.08.016.	SET SCREW - M8X1.25X16 - 8.8	8	
4	50.506.08.000.	PLAIN MACHINED WASHER - M8	8	

TITLE: - 4-20mA LOP AND WT SENSOR UNIT FOR EXPORT (WITHOUT WATER TEMP SWITCH)	**GROUP: -** 46.260.12

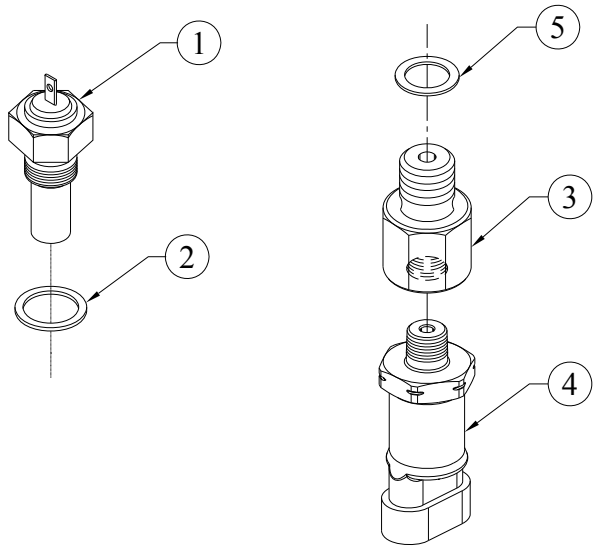

SR.NO.	PART NO.	DESCRIPTION	QTY.	REMARKS
1	46.085.02.0.00	SENSOR UNIT(FOR ELEC TEMP GAUGE)	1	
2	50.508.11.000.	COPPER WASHER (14X18)	2	
3	4H.235.01.0.00	ADAPTOR FOR L.O. PRESSURE SENSOR (M10 X 1.5 X 1/8" NPTF)	1	
4	DV0.812.11.0.00	4-20 mA LUBE OIL PRESSURE SENSOR GEMS MAKE 3100 SERIES	1	
5	50.508.08.000.	COPPER WASHER (10X16)	1	

TITLE: - SET OF JOINTS, COPPER WASHERS & 'O' RINGS (2H.4082)	**GROUP: -**

SR.NO.	PART NO.	DESCRIPTION	QTY.	REMARKS
*1	**2H.100.10.0.00**	**SET OF JOINTS**	1	CONSISTING OF SR. NO. 2 TO 20
*2	03.774.04.0.00	JOINT FOR COVER(AUX.L.O.SUMP)	1	
*3	2H.013.11.0.00	JOINT FOR DELIVERY BODY	1	
*4	2H.107.02.0.00	JOINT FOR ROCKER	1	
*5	34.016.12.0.00	JOINT FOR FUEL PUMP (NON ASBESTOS)	1	
*6	34.107.06.0.00	JOINT FOR ADAPTOR ON EX.MANIFOLD - SS MATERIAL	3	
*7	3H.007.15.0.00	JOINT FOR HEADER	1	
*8	3H.160.17.0.00	JOINT FOR EXHAUST SILENCER WITH(174 OD)S/F UN SHANTI	3	
*9	4H.001.14.0.00	JOINT FOR CAM BORE BLANKING PLATE	1	
*10	4H.030.06.0.00	METTALIC JOINT FOR INLET MANIFOLD	1	
*11	4H.039.02.0.00	JOINT FOR W.I.CONN.& THERMO.HSG.	1	

TITLE: - SET OF JOINTS, COPPER WASHERS & 'O' RINGS (2H.4082)	**GROUP: -**

SR.NO.	PART NO.	DESCRIPTION	QTY.	REMARKS
*12	4H.052.11.0.00	JOINT FOR BEARING HOUSING (282.5 CRS)	1	
*13	4H.052.12.0.00	JOINT FOR DELIVERY VOLUTE	1	
*14	4H.053.08.0.00	JOINT FOR THERMOSTAT COVER (METTALIC)	1	
*15	4H.053.11.0.00	JOINT FOR THERMOSTAT HOUSING	1	
*16	4H.1235.13.0.00	JOINT FOR GEAR CASING	1	
*17	4H.140.11.0.00	JOINT (ADAPTOR FOR BREATHER)	1	
*18	4H.971.09.0.00	RUBBER GASKET(SELF ADESIVE 20X5 MM) FOR CONTROL PANEL DOOR & GLAND PLATE	4	
*19	P1.007.09.0.00	CYL HEAD GASKET FOR 2 CYL ENGINE (THICKNESS 1.22)	1	
*20	P2.106.01.0.00	S.S. JOINT FOR EXHAUST MANIFOLD	2	
*21	**2H.074.50.0.00**	**SET OF COPPER WASHERS**	1	CONSISTING OF SR. NO. 22 TO 34

TITLE: - SET OF JOINTS, COPPER WASHERS & 'O' RINGS (2H.4082)	**GROUP: -**

SR.NO.	PART NO.	DESCRIPTION	QTY.	REMARKS
*22	50.508.07.000.	COPPER WASHER (10X14)	4	
*23	50.508.08.000.	COPPER WASHER (10X16)	2	
*24	50.508.10.000.	COPPER WASHER (12X18)	3	
*25	50.508.11.000.	COPPER WASHER (14X18)	4	
*26	50.508.12.000.	COPPER WASHER (14X20)	14	
*27	50.508.15.000.	COPPER WASHER (17X23)	1	
*28	50.508.16.000.	COPPER WASHER (18X22)	1	
*29	50.508.17.000.	COPPER WASHER (18X24)	8	
*30	50.508.18.000.	COPPER WASHER (20X24)	1	
*31	50.508.19.000.	COPPER WASHER (20X26)	1	
*32	50.508.23.000.	COPPER WASHER (22X27)	1	
*33	50.508.27.000.	COPPER WASHER (24X29)	2	
*34	F6.040.01.0.00	SEALING WASHER (FOR OIL FILLING CAP)	1	
*35	**2H.074.30.0.00**	**SET OF 'O' RINGS**	1	CONSISTING OF SR. NO. 36 TO 42
*36	03.010.11.0.00	O RING - L.O.PUMP (1.57X65,21508)	1	
*37	03.036.01.0.00	O RING - DIPSTICK (2X5,21515 OR 21511)	3	

TITLE: - SET OF JOINTS, COPPER WASHERS & 'O' RINGS (2H.4082)	**GROUP: -**

SR.NO.	PART NO.	DESCRIPTION	QTY.	REMARKS
*38	03.922.41.0.00	SEALING RING FOR FUEL FILTER	2	
*39	2H.008.07.0.00	O RING (FOR CYL.LINER)	2	
*40	2H.008.11.0.00	O RING FOR CYLINDER LINER (VITON MATERIAL)	1	
*41	2H.014.02.0.00	O RING(FOR DELIVERY TUBE)	2	
*42	F6.024.47.0.00	O - RING FOR DRAIN PLUG	1	

TITLE: - SET OF BEARINGS (2H.4082)

SR.NO.	PART NO.	DESCRIPTION	QTY.	REMARKS
		SET OF MAIN BEARINGS		
*1	02.001.87.0.00	MAIN BEARING HALF(STANDARD)	6	
		SET OF CONROD BEARINGS		
*2	04.685.02.0.00	CONNECTING ROD BIG END BEARING (NA)	4	
		SET OF THRUST WASHERS		
*3	03.001.19.0.00	THRUST WASHER -DRIVE END,TOP	1	
*4	03.001.21.0.00	THRUST WASHER (DRIVE END,BOTTOM)	1	
*5	4H.003.02.0.00	THRUST WASHER FOR CAM SHAFT	1	